LCDMCORP.COM

LCDM

WHERE THE

FUTURE OF GRAIN HANDLING IS BUILT.

PRODUCT CATALOG

2026

OUR MIND-SET

WE ARE AN AGILE COMPANY WITH A SMALL BUSINESS ATTITUDE. WE ARE EASY TO WORK WITH AND HIGHLY RESPONSIVE BECAUSE WE KNOW THAT EVERY SOLUTION TAILORED PRECISELY FOR OUR CUSTOMER'S NEEDS KEEPS THEM MOVING.

OUR FOCUS

WE AIM TO BE THE VOICE OF INNOVATION IN OUR INDUSTRY. WE STRIVE FOR CONSTANT IMPROVEMENT BY ALWAYS LOOKING AT WAYS WE CAN DO THINGS BETTER, SMARTER AND MORE EFFICIENT.

OUR VISION IS TO IMPROVE THE WORLD'S GRAIN SUPPLY CHAIN THROUGH WELL ENGINEERED AND MANUFACTURED

GRAIN HANDLING PRODUCTS WITH A PURPOSE.

» GRAIN HANDLING EQUIPMENT

» CUSTOM DESIGN

» ENGINEERING SOLUTIONS

» EMPLOYEE OWNED

LCDM is your headquarters for custom grain handling equipment designed with the millwright in mind. With our 40 years of field experience, we can work with you to develop an innovative grain flow equipment solution that will help you increase efficiencies and reduce costs.

OUR HERITAGE

A great grain flow distribution or other bulk material handling operation requires an efficient design and high-quality components. That's exactly what you can always expect from LCDM. LCDM was born out of a recognized need for better design and engineering for grain flow products, and since that time, we are continually working on bringing you the most efficient products the industry can provide. Our knowledge of the material handling industry and design expertise can help you bring your material handling operation to places you may have never thought possible.

We are excited to welcome you to LCDM. We know our partnership will be mutually beneficial, and we look forward to helping you grow and succeed throughout the year with superior grain flow components, products and services. The future of grain flow is LCDM.

TABLE OF CONTENTS

LCDM Engineering & Design Support	6-9
LCDM DBAR Cushion Box	10-15
LCDM Slide Gates	16-23
LCDM Valves	24-31
Square Spouting	32-33
Square Spouting Accessories	34-35
Galvanized Spouting	36
Elbows	37
Flow Retarders	38-39
Round Pipe Truss Kit	40
Cable & Accessories	41
Round Spouting Accessories	42
Round Branches	43
Transition	44
Cushion Boxes & Collector Box	45
Overflow Valves	46
Sump Saver	47
Flat Back Distributor	48
Ceramic Tile and Adhesives	49
Lining Material	50-51
Repair Patches	52-55
Product Dimensions and Specifications	56

ENGINEERING AND DESIGN SUPPORT

KEY ADVANTAGES

ADAPTIVE APPROVAL MODELS

Approval models available in most industry-standard file formats, including STL, STP, DXF, EPRT, EASM, DWG, PDF, and SAT.

SCRATCH DESIGNS

We can transform any concept into a complete, manufacturable engineering design tailored specifically to the application.

DESIGN CHANGES

Engineering support for revisions and modifications, ensuring your design evolves seamlessly to meet your exact requirements.

DESIGN ARCHIVE

Secure design storage for all past orders, allowing for easy reorders, updates, or future production at any time.

(888) 963-9145

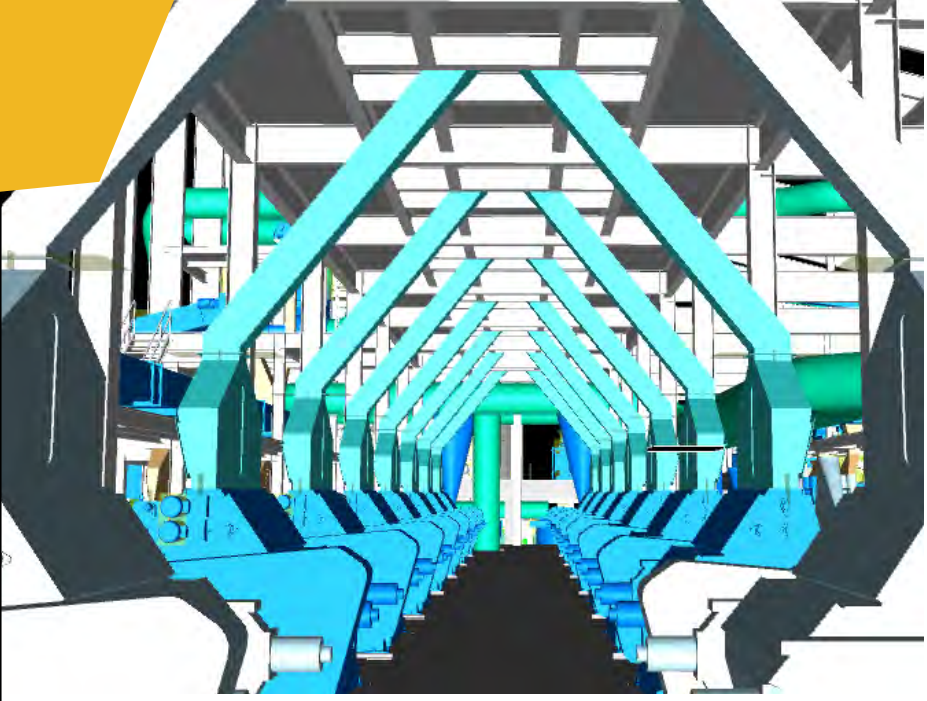

Model Concept

We engage in thorough discussions to understand your requirements and how our products and services can elevate your project.

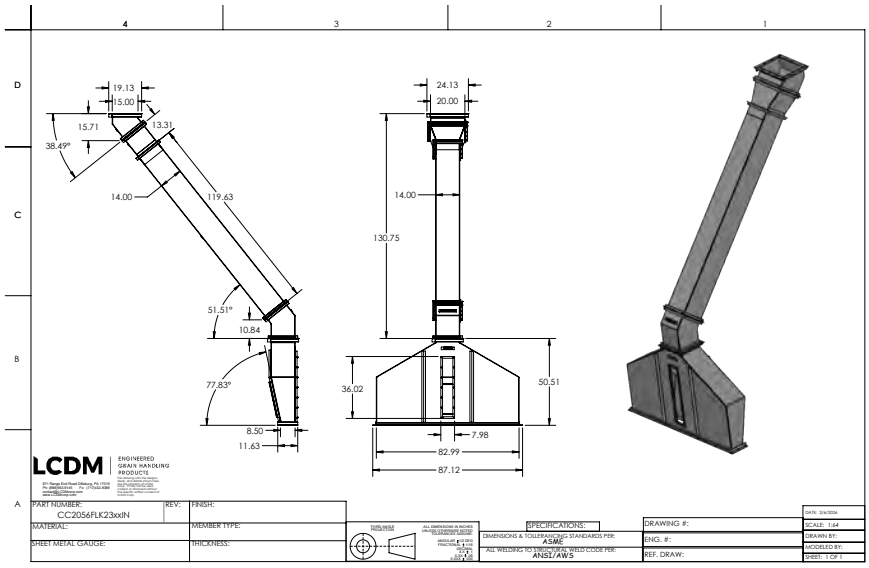

Approval Phase

Our skilled in-house design team meticulously crafts an approval drawing, ensuring alignment with your specific product specifications for your review and confirmation.

Final Install

Following fabrication, our team conducts the final assembly and inspection to ensure the final product matches the approved design before shipping.

LCDM
WWW.LCDMCORP.COM
(888) 963-9145

CUSTOM FABRICATIONS

Achieve efficiency with expertly tailored solutions. The LCDM designers can work closely with you to create a personalized distribution system that best suits your operations and facility. Our staff is fully trained and certified in SolidWorks, the industry's best design software for engineering state-of-the-art grain flow products.

LCDM designs and engineers products and services outside of our standard product line. From custom transitions to slide gates, we design new and modern solutions to help increase your bottom line. LCDM is equipped with highly skilled, trained, and SolidWorks certified personel and the infrastructure to support you throughout the duration of your project.

DBAR CUSHION BOX | SIGNATURE PRODUCT

Finding reliable, cost-effective ways to minimize grain damage poses an ongoing challenge for the grain handling industry. LCDM offers an innovative DBAR adjustable cushion box that's revolutionizing the grain flow equipment industry.

The DBAR features a patented design that reduces grain damage by more than 50 percent — and in some cases, the box eliminates damage entirely. Less grain damage means a more productive and profitable operation.

DBAR FEATURES

ADJUSTABLE BAFFLE:

An adjustable baffle allows you to customize the level of cushion for the grain to meet your specifications.

VERSATILITY:

The cushion box's construction works well for full or partial-capacity situations.

DURABILITY:

The heavy-duty 8-gauge body with a hot dip galvanized finish ensures reliable, long-lasting performance in all operating conditions and environments.

EASY MAINTENANCE:

Two conveniently located oversized service doors make cleaning a breeze. Checking for and removing foreign objects, dust and debris is a fast, straightforward process.

LINER OPTIONS:

A wide variety of liner options are available, including blue urethane, Kryptane and Extreme Green.

LCDM DBAR Cushion Box

PATENT# 9052044B2

LCDM's DBAR Cushion Box has changed the way grain system equipment is installed and utilized. The DBAR was designed to reduce and eliminate grain damage in situations where it's most critical. Its patented design includes an internal cone to collect grain and create a real cushion. In turn, the DBAR can be utilized when grain is running at full and partial capacities. The DBAR has proven to exceed expectations in situations where flow retarders and "round style" cushion boxes were originally being used. In most instances, the use of a DBAR eliminates the need for flow retarders in the middle of spouts, making for convenient installation and access. No other cushion box on the market can outperform the DBAR in quality and versatility.

Standard option DBAR Cushion Box

The standard option includes a heavy 7 gauge galvanized body with 2 service doors. The upper service door is large enough to access and replace the internal components, and remove any foreign objects that may be present. This eliminates the need for replacing the entire cushion box in the future. Clamp bands are available for most sizes to help facilitate the installation process.

Custom Liner options and finishes

The DBAR has multiple liner options for your specific need and situation. Liner options include 1/4" blue urethane, Red Kryptane, and High Energy Orange urethane. Also available is a commercial grade urethane for higher capacity situations. The DBAR is also available in plain carbon, primed/painted, and stainless steel.

Ideal situations for the DBAR

The DBAR can be used to replace any cushion box on the market on any angled spout from 35° to 90°. The best situations for the DBAR are areas where flow rates are variable (times when you might be running the spout full and other times at half capacity). It is suggested to be used in situations where cross contamination needs to be minimized. The self-cleaning internal cone allows for cleanout.

SIGNATURE PRODUCT

CAD MODELS AVAILABLE
OVERLAY AND LAYOUTS AVAILABLE

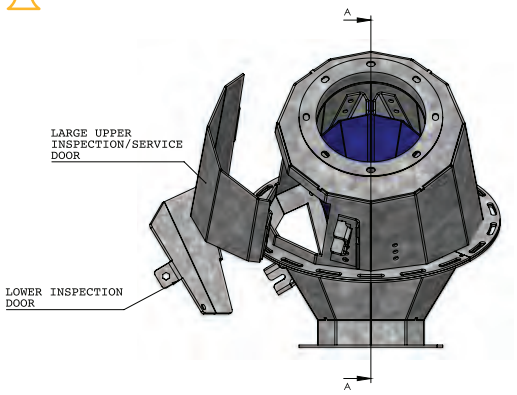

INSPECTION DOOR ON LOWER SIDE

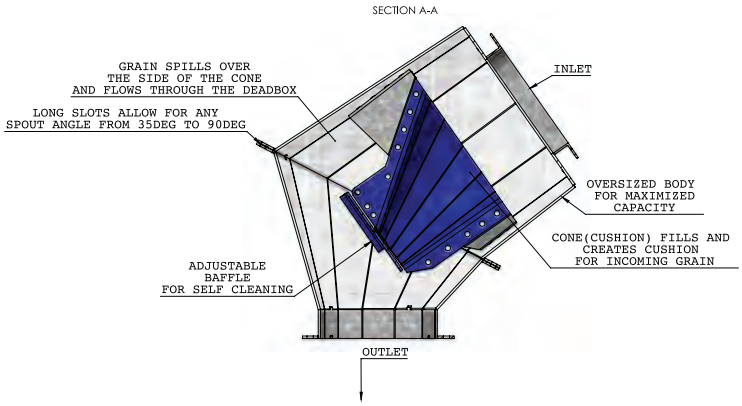

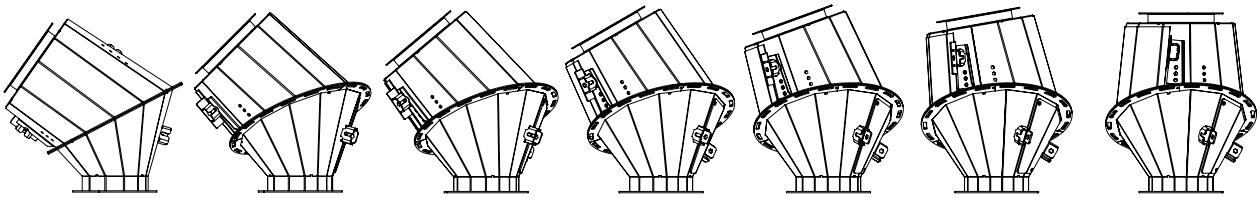

35DEG. 45DEG. 50DEG. 60DEG. 70DEG. 80DEG. 90DEG.

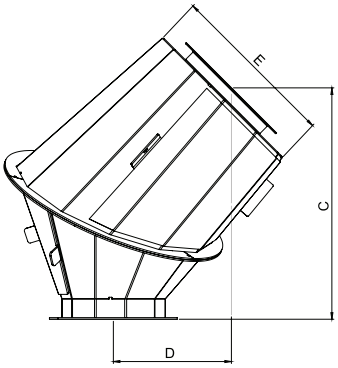

DIMENSIONS SHOWN @ 45DEG

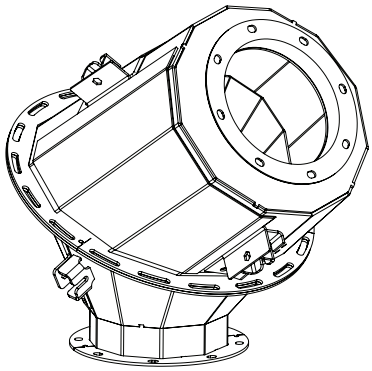

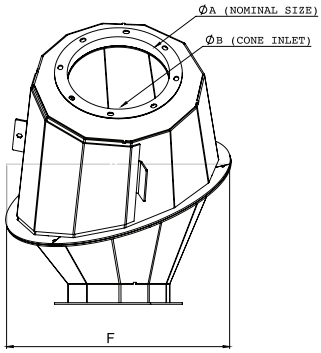

DIMENSIONS

PART NUMBER	A	B	C	D	E	F
DBAR0808GDx	8	9	19--1/8	6--3/4	14	16
DBAR1008GDx	10	11	22--3/4	9--1/8	17	20
DBAR1208GDx	12	13	26--3/4	11--1/8	20	24
DBAR1408GDx	14	15	30--7/8	12--7/8	23	28
DBAR1608GDx	16	17	34--7/8	14--5/8	26	32
DBAR1808GDx	18	19	39	16--3/8	28	40
DBAR2008GDx	20	21	43	18--1/8	32	44

DBAR CUSHION BOX PRICING (GALVANIZED)

PART NUMBER	1/4" URETHANE LINED CONE *Part# will end in "GUD"	1/4" KRYPTANE LINED CONE *Part# will end in "GKD"	EXTREME GREEN LINED CONE *Part# will end in "GED"
DBAR0608	$903.00	$959.00	$1,070.00
DBAR0808	$1,028.00	$1,084.00	$1,195.00
DBAR1008	$1,212.00	$1,300.00	$1,383.00
DBAR1208	$1,509.00	$1,592.00	$1,821.00
DBAR1408	$1,683.00	$1,800.00	$2,062.00
DBAR1608	$2,010.00	$2,390.00	$2,793.00
DBAR1808	$2,269.00	$2,752.00	$3,206.00
DBAR2008	$2,494.00	$3,068.00	$3,439.00
DBAR2408	$2,844.00	$3,454.00	$4,894.00

REPLACEMENT CONES

PART NUMBER	8GAUGE
DBAR0608CC	$130.00
DBAR0808CC	$143.00
DBAR1008CC	$150.00
DBAR1208CC	$165.00
DBAR1408CC	$170.00
DBAR1608CC	$215.00
DBAR1808CC	$230.00

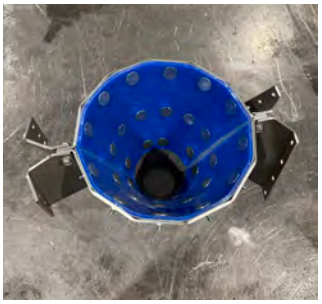

REPLACEMENT LINERS (URETHANE)

PART NUMBER	1/4" URETHANE (BLUE) *Part# will end in "LU"	1/4" URETHANE (RED KRYPTANE) *Part# will end in "LK"	1/4" URETHANE (EXTREME GREEN) *Part# will end in "LE"
DBAR08	$96.00	$152.00	$263.00
DBAR10	$117.00	$186.00	$288.00
DBAR12	$146.00	$229.00	$458.00
DBAR14	$173.00	$290.00	$552.00
DBAR16	$202.00	$380.00	$783.00
DBAR18	$229.00	$483.00	$937.00
DBAR20	$259.00	$574.00	$945.00
DBAR24	$315.00	$610.00	$1050.00

SLIDE GATES

SIGNATURE PRODUCT

LCDM Slide Gates are uniquely designed to meet your needs, maximize efficiency and offer best in class reliability. Our slide gates make controlling the flow of grain and other bulk materials at discharge points easy. With several options to choose from, LCDM can accommodate all your grain flow requirements.

KEY FEATURES

REVOLUTIONIZING GRAIN FLOW EQUIPMENT

LCDM designs and builds all rack and pinion slide gates in-house. In addition, all slide gates are made up of domestically produced products. You can be sure the quality of our products will meet your expectations.

- Bolt together design
- Laminated rack and pinion
- Cold rolled zinc plated wheels and hubs
- Standard galvanized body
- Bearing supported shaft
- Manual, electric and pneumatic drives available
- Seal kits available for feed applications
- Custom sizes and configurations available
- Available in Painted, Galvanized and Stainless Steel

Manual Operation Rack and Pinion Slide Gate

Manual operated Rack and Pinion Slide Gates are the most common option. Stock sizes range from 6" to 24" with both 10 gauge and 8 gauge galvanized metal body options. The inlets and outlets of these gates are square, but can be made round by adding square to round transitions. LCDM stocks hand wheels and chain wheels for manual control options.

Electrically Actuated Rack and Pinion Slide Gate

Electrically actuated Rack and Pinion Slide Gates are typically utilized in commercial operations where cable controls would be difficult to install, or where a PLC is controlling the operation of the valve. The standard electric option includes (1) actuator, (1) motor, and (2) limit switches. Explosion proof motors and switches are available upon request as options for motor voltages.

Gear Drive Operation Rack and Pinion Slide Gate

Gear Drive operated Rack and Pinion Slide Gates are mostly utilized in commercial applications. In most cases, there are too many gates to open manually, so an electric motor is installed for ease of operation. The standard electric option includes (1) motor, (1) gear reducer, and (2) limit switches. Explosion proof motors and limit switches are available upon request as well as high voltage motors.

Pneumatic Operation Slide Gates

Pneumatic operated Slide Gates are most utilized in commercial and feed mill operations. The specific operation of the valve will determine the pneumatic option needs. All pneumatic options include an air cylinder with add on options of solenoids and limit switches. Explosion proof solenoids and limit switches are available.

Hopper Bottom Adapter

LCDM's Hopper Bottom Adapter can be utilized with most industry hopper bins. LCDM stocks an adapter that bolts up to a 16″ hopper outlet. An 18″ slide gate must be used with this adapter to fit properly. Adapters in stock will bolt up to Brock and GSI 16″ hopper bins. An adapter for a Sukup hopper bin is also available.

MANUAL

PART NUMBER	10 GAUGE	8 GAUGE	WEATHER COVERS (12 GAUGE)
GTRS06xxx	$467.25	$488.25	$32.00
GTRS08xxx	$472.50	$560.70	$37.00
GTRS10xxx	$498.75	$623.70	$42.00
GTRS12xxx	-	$800.10	$52.00
GTRS14xxx	-	$813.75	$76.00
GTRS16xxx	-	$849.45	$91.00
GTRS18xxx	-	$877.80	$98.00
GTRS20xxx	-	$981.75	$102.00
GTRS22xxx	-	$1,132.95	$105.00
GTRS24xxx	-	$1,181.25	$115.00

ELECTRIC

STANDARD ELECTRIC ADD ON OPTION INCLUDES:

- 1 - 1/2HP, (single or three phase), 1750RPM, TEFC motor
- 1 - 100:1 gear reducer
- 2 - Lever style limit switches

$1,813/ea

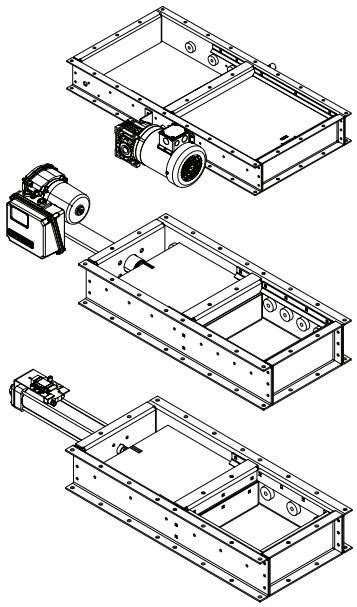

(Product specs page 53)

PNEUMATIC

PART NUMBER	SLIDE GATE W/ AIR CYLINDER (MOUNTED) PART# WILL END IN "GC"	SLIDE GATE W/ AIR CYLINDER & SINGLE SOLENOID, 110V (MOUNTED) PART# WILL END IN "GCS1"	SLIDE GATE W/ AIR CYLINDER & DOUBLE SOLENOID, 110V (MOUNTED) PART# WILL END IN "GCS2"	ADD FOR: SET OF (2) INDICATOR SWITCHES, 110V (MOUNTED) PART# WILL END IN "GCS3"
GTPS0608	$946.05	$1,173	$1,316	$124
GTPS008	$1,020.60	$1,245	$1,388	$124
GTPS1008	$1,096.20	$1,317	$1,460	$124
GTPS1208	$1,118.25	$1,333	$1,476	$124
GTPS1408	$1,177.05	$1,391	$1,538	$124
GTPS1608	$1,283.10	$1,485	$1,636	$124
GTPS1808	$1,401.75	$1,598	$1,744	$124
GTPS2008	$1,585.50	$1,774	$1,919	$124
GTPS2208	$1,625.40	$1,812	$1,957	$124
GTPS2408	$1,718.85	$1,909	$2,047	$124

** LCDM will build to your specifications

STANDARD PNEUMATIC OPTION INCLUDES:

- 1 - 2-1/2 bore cylinder
- 1 - Single or double solenoid (110V)
- 2 - Indicator reed switches (110V)
- All fittings and tubing

AERATION TUNNEL UNLOAD TRANSITION AND SLIDE GATE PACKAGE.

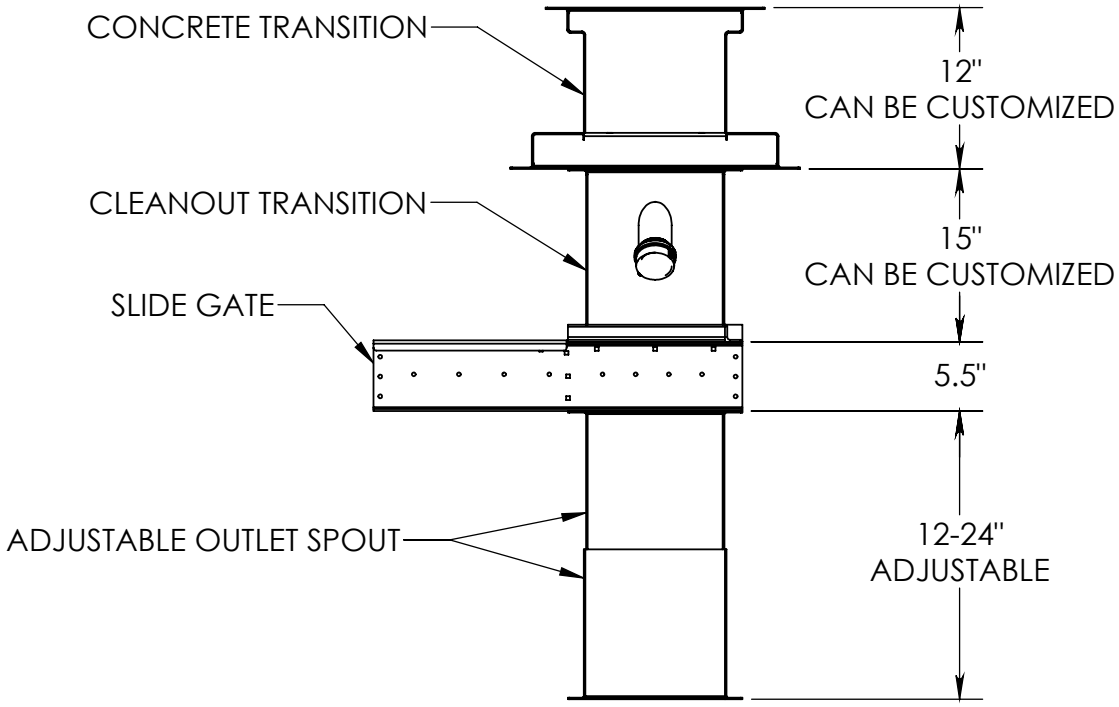

ADDITIONAL FEATURES

- LEAK PROOF INLET COLLARS
- ZINC PLATED STEEL ROLLERS
- OIL IMPREGNATED BUSHINGS
- STOCK SIZES FROM 6"-24"

CONTACT LCDM FOR SPECIFIC DIMENSIONS & PRICING.

(888) 963-9145

SLIDE GATE ACCESSORIES (GALVANIZED)

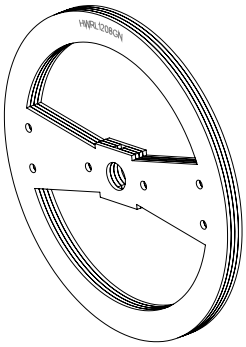

10” HAND WHEEL HWRL10

$86/ea

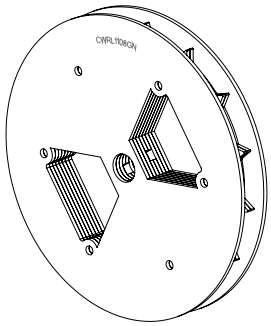

11” CHAIN WHEEL CWRL1108GN

$126/ea

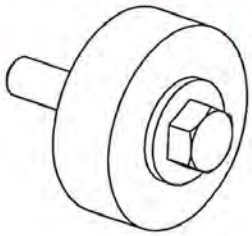

SLIDE GATE WHEEL

$7.00/ea

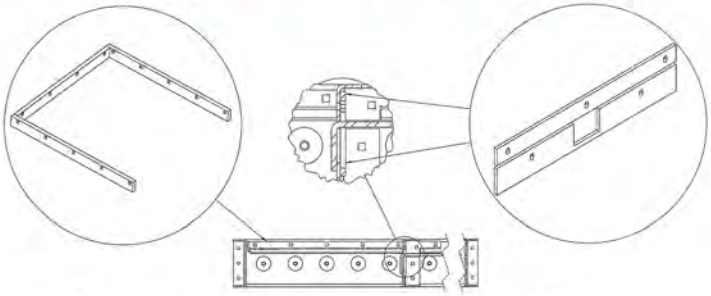

DUST SEAL KIT DSKUxx

$200.00/ea

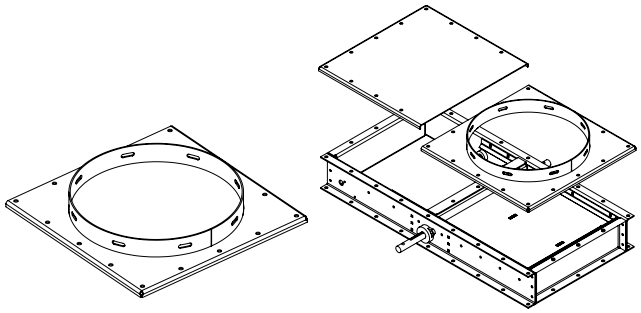

HOPPER ADAPTER PLATE SGHB1810GN

- Brock, GSI, Sukup Bins
- For use with hopper bottoms
- Heavy 10 Ga galvanized construction
- Slotted holes for easy installation
- Can only be used with LCDM Slide Gate (18”)

$101.50/ea

CUSTOM SLIDE GATES

- Custom Slide Gate solutions
- We can adapt to existing gates that may not be standard

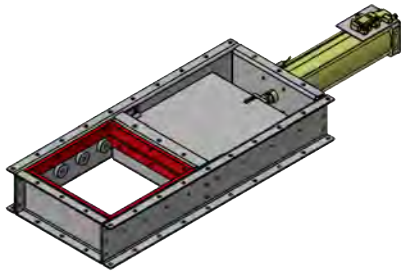

ENCODER-FLEX 1024

Rotary Shaft Encoder and Gate Position Monitor

- Monitors shaft speed, angle, or position
- Outputs: 4-20 mA, Quadrature Pulse (Speed Relative Rotation), and RS485 Modbus RTU
- Programmable resolution from 1 to 1024 Pulses per Revolution
- Compatible with gates to control systems (PLC, SCADA, Watchdog, IE-Node, etc)
- Memorizes shaft position in the case of a power loss
- Simple magnetic calibration
- Comprehensive software for access to advanced programming and visualization
- Sealed stainless steel enclosure
- LED Status Indicators
- CSA Class II Div 1 Approval Pending (USA & Canada)

Display Monitor
$476

Encoder
$1,001

LCDM VALVES

SIGNATURE PRODUCT

LCDM Valves are unique in that they are "full flow". What does this mean? Many of the valve designs in the industry today restrict the flow of grain. For example, an 8" valve will not effectively handle the capacity of the spout feeding it. However, LCDM Full Flow Valve's were designed to handle this capacity without having any restriction of flow. This means that you can fully accommodate the flow from the spout and maximize the flow of grain when the valve is open.

KEY FEATURES

FULL FLOW VALVES

LCDM designs and builds grain flow products that are more efficient and easier to use. With grain distribution and material handling companies in mind, our full flow grain valves will help you streamline workflow and save on lost grain costs.

- Offset (K-Style), Two-way (Y-Style), Three way, Diverter
- Full flow design
- Handles the incoming capacity without restricting flow
- Standard galvanized body
- Multiple liner options
- Manual, electric and pneumatic drives available
- Seal kits available for feed applications
- Custom sizes and configurations available
- Available in Painted, Galvanized and Stainless Steel

LCDM Valves

LCDM's Full Flow Valves are unique to the agriculture industry. These valves are designed to handle the flow of the spout feeding into it, without restricting the flow. The Full Flow Valves also feature inlet collars to prevent grain from leaking.

Manual Operation

Manual operated valves are the most common option. Stock sizes range from 6" to 16" with both 10 gauge and 8 gauge galvanized metal body options. The inlets and outlets of these valves are square, but can be made round by adding square to round transitions. LCDM stocks 45° valves but 60° valves are available upon request.

Electrically Actuated Full Flow Pan Style Valves

Electrically actuated valves are typically utilized in commercial operations where cable controls would be difficult to install, or where a PLC is controlling the operation of the valve. The standard electric option includes (1) Duff Norton Actuator, (1) motor and (2) limit switches. Explosion proof motors and switches are available upon request as options for motor voltages.

Gear Drive Operation Full Flow Pan Style Valves

Gear Drive operated valves are most utilized in situations where cable controls are difficult or impossible to install. Another common application is where the physical space constraints do not allow for a linear actuated valve. The standard electric option includes (1) motor, (1) gear reducer and (2) limit switches. Explosion proof motors are available upon request as well as high voltage motors.

Pneumatic Operation Full Flow Pan Style Valves

Pneumatic operated valves are most utilized in commercial and feed mill operations. The specific operation of the valve will determine the pneumatic option needs. All pneumatic options include an air cylinder with add on options of solenoids and limit switches. Explosion proof solenoids and limit switches are available.

Liner options and finishes

All LCDM Full Flow Pan Style Valves have multiple linear options available for different situations. Liners offered are AR400 Steel, Urethane, and Ceramic Tile. Also available are inspection ports upon request. Although standard stock is galvanized finish, valves are available in plain carbon, primed/painted, and stainless steel.

MANUAL

PART NUMBER	NOMINAL SIZE	10 GAUGE SQ IN/SQ OUT	10 GAUGE RD IN/RD OUT	8 GAUGE SQ IN/SQ OUT	8 GAUGE RD IN/RD OUT	AR LINER (ADD)	1/4" URETHANE LINER (ADD)	1/4" CERAMIC TILE LINER (ADD)
VAKS06xx45xx	6	$350.00	$591.00	-	-	$108.00	$108.00	$150.00
VAKS08xx45xx	8	$383.00	$622.00	$498.00	$851.00	$108.00	$108.00	$150.00
VAKS10xx45xx	10	$449.00	$694.00	$542.00	$975.00	$145.00	$145.00	$203.00
VAKS12xx45xx	12	$565.00	$927.00	$896.00	$1,366.00	$180.00	$180.00	$255.00
VAKS14xx45xx	14	$638.00	$1,019.00	$922.00	$1,420.00	$203.00	$203.00	$285.00
VAKS16xx45xx	16	- - - - CONSULT FACTORY- - - -						

• Liner pricing does not include Transitions (Valve only)

MOTOR/GEARBOX ELECTRIC ADD ON OPTION INCLUDES:

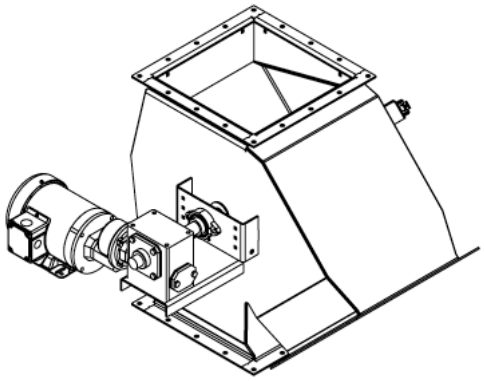

» 1 - 1/4HP, (single or three phase), 1750RPM, TEFC motor
» 1 - 300:1 gear reducer
» 2 - Lever style limit switches

Price: $2,208/ea. (add to manual valve prices above)

****Also available:**

» 1HP motors
» HD 300:1 reducers
» Proximity switches

(Product specs page 55)

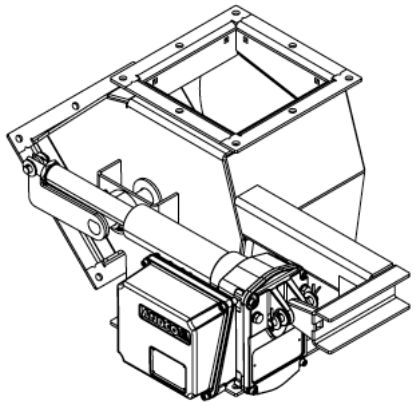

CONTACT US FOR PRICING ON LINEAR ACTUATOR ELECTRIC OPTION (ANDCO)

(888) 963-9145

STANDARD PNEUMATIC OPTION INCLUDES:

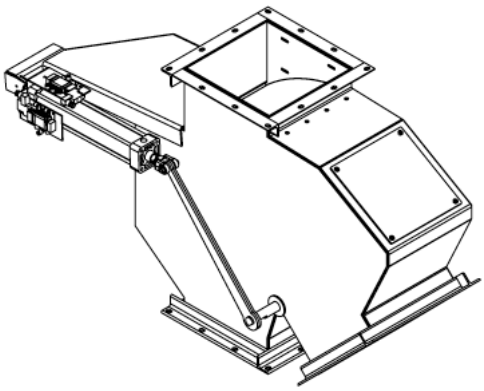

» 1 - 2-1/2" bore cylinder
» 1 - Double solenoid (110V)
» 2 - Indicator reed switches (110V)
» All fittings and tubing

Price: $998/ea. (add to manual valve prices above)

****Custom sizes and configurations available upon request**

MANUAL

PART NUMBER	NOMINAL SIZE	10 GAUGE SQ IN/SQ OUT	10 GAUGE RD IN/RD OUT	8 GAUGE SQ IN/SQ OUT	8 GAUGE RD IN/RD OUT	AR LINER (ADD)	1/4" URETHANE LINER (ADD)	1/4" CERAMIC TILE LINER (ADD)
VAYS06xx45xx	6	$299.00	$532.00	-	-	$108.00	$108.00	$150.00
VAYS08xx45xx	8	$353.00	$592.00	$412.00	$702.00	$93.75	$108.00	$150.00
VAYS10xx45xx	10	$333.00	$608.00	$478.00	$838.00	$125.00	$145.00	$203.00
VAYS12xx45xx	12	$442.00	$803.00	$545.00	$940.00	$156.25	$180.00	$255.00
VAYS14xx45xx	14	$476.00	$899.00	$694.00	$1,036.00	$187.50	$203.00	$285.00
VAYS16xx45xx	16	- - - Consult Factory - - -		$728.00	$1,180.00	$218.75	$250.00	$300.00

• Liner pricing does not include Transitions (Valve only)

MOTOR/GEARBOX ELECTRIC ADD ON OPTION INCLUDES:

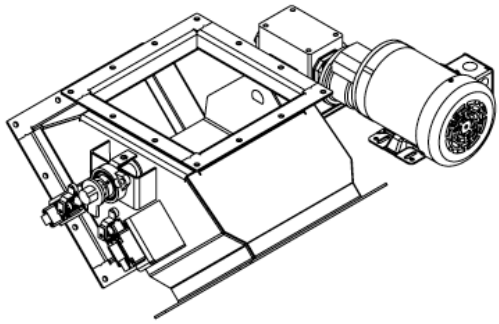

» 1 - 1/4HP, (single or three phase), 1750RPM, TEFC motor
» 1 - 300:1 gear reducer
» 2 - Lever style limit switches

Price: $2,208/ea. (add to manual valve prices above)

****Also available:**

» 1HP motors
» HD 300:1 reducers
» Proximity switches

(Product specs page 57)

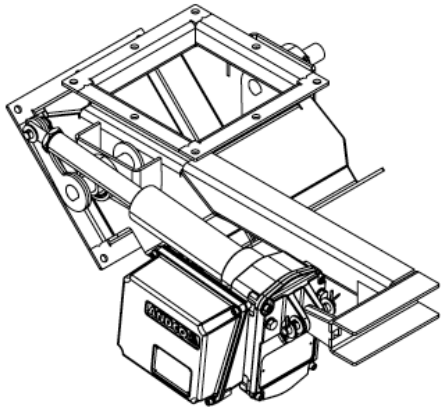

CONTACT US FOR PRICING ON LINEAR ACTUATOR ELECTRIC OPTION (ANDCO)

(888) 963-9145

STANDARD PNEUMATIC OPTION INCLUDES:

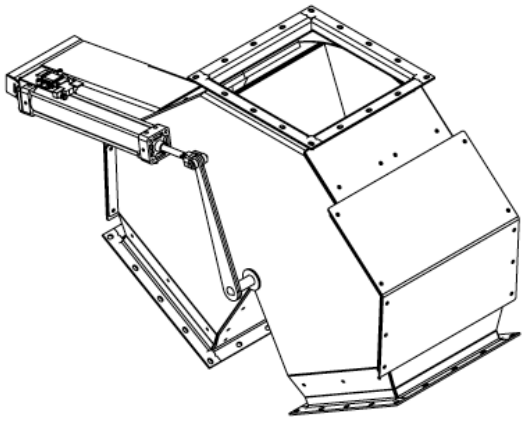

» 1 - 2-1/2" bore cylinder
» 1 - Double solenoid (110V)
» 2 - Indicator reed switches (110V)
» All fittings and tubing

Price: $998/ea. (add to manual valve prices above)

****Custom sizes and configurations available upon request**

3-WAY VALVE PRICING (GALVANIZED)

SIGNATURE PRODUCT

MANUAL

PART NUMBER	NOMINAL SIZE	10 GAUGE SQ IN/SQ OUT	10 GAUGE RD IN/RD OUT	8 GAUGE SQ IN/SQ OUT	8 GAUGE RD IN/RD OUT	AR LINER (ADD)	1/4" URE-THANE LINER (ADD)	1/4" CERAM-IC TILE LINER (ADD)
VATS06xx45xx	6	$678	$1,028	-	-	$282	$282	$325
VATS08xx45xx	8	$771	$1,128	$964	$1,410	$282	$282	$325
VATS10xx45xx	10	$1,080	$1,660	$1,320	$2,025	$375	$375	$432
VATS12xx45xx	12	$1,093	$1,607	$1,440	$2,064	$470	$470	$541
VATS14xx45xx	14	-	-	$1,560	$2,267	$563	$563	$648
VATS16xx45xx	16	- - - Consult Factory - - -		$1,725	$2,643	$657	$657	$756

• Liner pricing does not include Transitions (Valve only)

MOTOR/GEARBOX ELECTRIC ADD ON OPTION INCLUDES:

» 2 - 1/4HP, (single or three phase), 1750RPM, TEFC motors

» 2 - 300:1 gear reducers

» 4 - Lever style limit switches

Price: $4,416/ea. (add to manual valve prices above)

****Also available:**

» 1HP motors

» HD 300:1 reducers

» Proximity switches

(Product specs page 59)

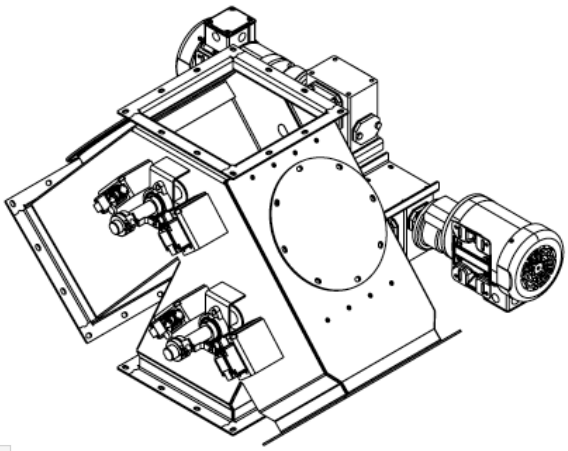

STANDARD PNEUMATIC OPTION INCLUDES:

» 2 - 2-1/2" bore cylinder

» 2 - Double solenoid (110V)

» 4 - Indicator reed switches (110V)

» All fittings and tubing

Price: $1,996/ea. (add to manual valve prices above)

****Custom sizes and configurations available upon request**

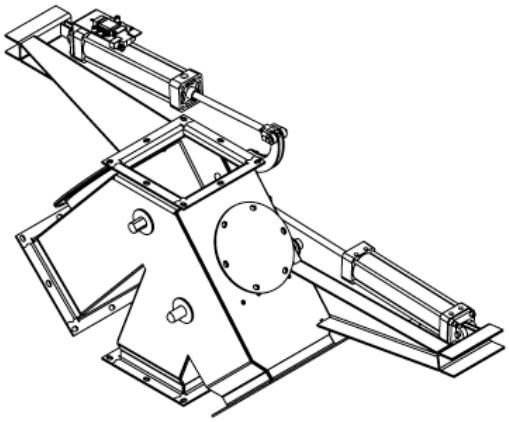

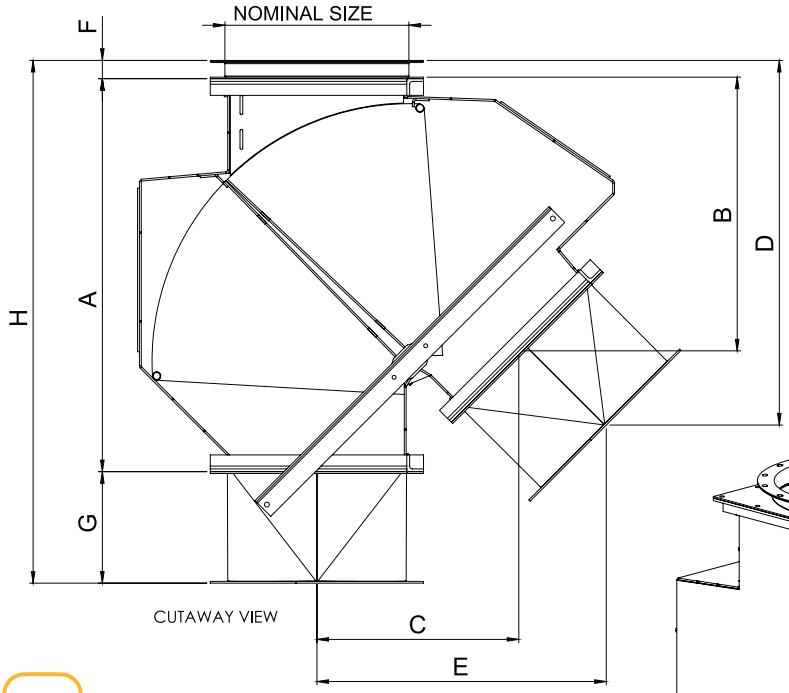

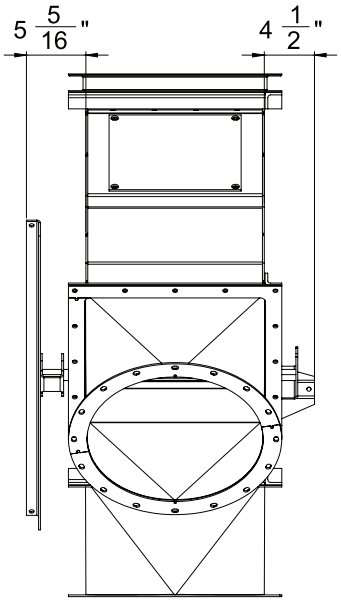

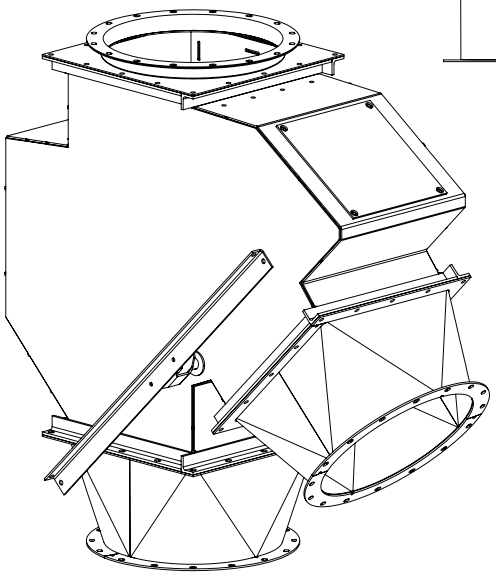

CONTACT LCDM FOR SPECIFIC DIMENSIONS & PRICING.

(888) 963-9145

MANUAL

PART NUMBER	NOMINAL SIZE	A	B	C	D	E	F	G	H
VAKSD06xx45xx	6	15--7/8	11	8	16	11--7/8	1--3/8	5--1/4	22
VAKSD08xx45xx	8	19--1/2	14--5/8	10--1/2	19--1/4	16--5/8	1--3/8	5--1/4	26--1/8
VAKSD10xx45xx	10	23	16--5/8	12	21--1/4	16--1/4	1--3/8	5--1/4	29--5/8
VAKSD12xx45xx	12	23--3/4	19--1/4	14--3/4	25--1/8	19--1/4	1--5/8	6--1/4	34--5/8
VAKSD14xx45xx	14	31--1/8	21--1/4	16--5/16	27--1/4	20--7/8	1--5/8	6--1/4	39
VAKSD16xx45xx	16	35--1/4	24	18--7/8	32--7/8	25--7/8	1--5/8	6--1/4	46--7/8
VAKSD18xx45xx	18	39--3/8	28--1/4	22--1/4	36--1/2	29--1/8	1--5/8	10	51
VAKSD20xx45xx	20	43--1/8	31--1/8	22--1/4	39--5/16	31--5/8	1--5/8	10	54--3/4
VAKSD22xx45xx	22	46--3/4	35--5/8	26--7/8	42--1/8	34	1--5/8	10	58--1/2
VAKSD24xx45xx	24	50	37	27--1/2	43--1/4	34--1/2	1--5/8	10	61--5/8
VAKSD30xx45xx	30	61--3/8	42--1/8	33--1/2	51--3/8	40--1/2	2--1/8	10	73--1/2

WELDED SEAM SQUARE SPOUTING

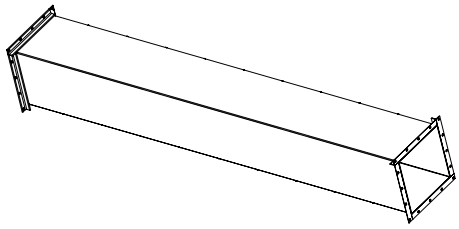

Galvanized Material (Standard)

- Standard 10′ Lengths
- Stainless and Carbon Steel available upon request
- Please call LCDM for sizes not listed below

SIZE	12 GAUGE FLANGED & UNFLANGED	10 GAUGE FLANGED & UNFLANGED	8 GAUGE FLANGED & UNFLANGED	1/4" FLANGED & UNFLANGED
6	All Square Spouting is made to order. CALL FOR PRICING. If you need something not listed, please give us a call.			
8				
10				
12				
14				
16				
18				
20				
24				
30				
36				

REMOVABLE LID SQUARE SPOUTING

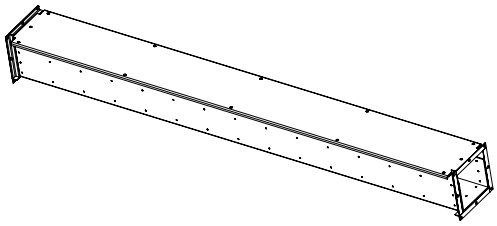

Galvanized Material (Standard)

- Standard 10′ Lengths
- Liner packages include full width bottom and 2/3 of each side
- All liner packages are manufactured to be replaceable
- Contact LCDM for stainless steel pricing

SIZE	12 GAUGE UNLINED	10 GAUGE UNLINED	7 GAUGE AR LINED	1/4" URETHANE BLUE	5/16" URETHANE BLUE	5/16" CERAMIC CHIP URETHANE	1/4" UHMW	1/4" HIGH ENERGY ORANGE	1/4" KRYPTANE RED	1/4" CERAMIC TILE
6	All Square Spouting is made to order. CALL FOR PRICING. We offer all the above liner options and replacement liners. If you need something not listed, please give us a call.									
8										
10										
12										
14										
16										
18										
20										
24										
30										
36										

WELDED SEAM SQUARE SPOUT WEIGHTS (PER 10' SECTION)

SIZE	14 GAUGE	12 GAUGE	10 GAUGE	7 GAUGE
6	91	116	153	204
8	122	156	207	275
10	149	191	252	337
12	181	231	306	408
14	213	272	360	479
16	240	306	405	541
18	272	347	459	612
20	304	387	513	683
22	331	422	558	745
24	362	462	612	816
30	453	578	765	1020
36	544	694	918	1224

REMOVABLE LID SQUARE SPOUT WEIGHTS (PER 10' SECTION)

SIZE	10 GAUGE (UNLINED)	LINED WITH 7G AR	LINED WITH 1/4" URETHANE	LINED WITH 1/4" CERAMIC TILE
6	122	221	154	213
8	164	296	207	285
10	201	366	255	352
12	243	442	308	424
14	286	518	361	498
16	321	587	408	564
18	364	663	462	637
20	406	738	515	709
22	443	808	562	777
24	485	883	615	849
30	607	1104	769	1062
36	729	1326	924	1274

SQUARE SPOUT CAPACITY (10' SECTION)

SIZE	SQUARE INCHES	BPH (UNLINED)
6	36	2500
8	64	4400
10	100	7000
12	144	10000
14	196	13500
16	256	17500
18	324	22500
20	400	28000
22	484	33500
24	576	40000
30	900	63000
36	1296	90500

SQUARE ANGLE IRON FLANGES

Plain Carbon

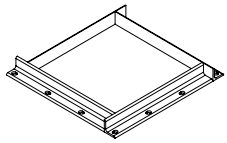

PART NUMBER	DESCRIPTION	LIST PRICE
FLAS0608B	Square Angle Iron Flange, 6" x 3/16" (plain carbon)	$18.14
FLAS0808B	Square Angle Iron Flange, 8" x 3/16" (plain carbon)	$19.88
FLAS1008B	Square Angle Iron Flange, 10" x 3/16" (plain carbon)	$24.52
FLAS1208B	Square Angle Iron Flange, 12" x 3/16" (plain carbon)	$26.50
FLAS1408B	Square Angle Iron Flange, 14" x 3/16" (plain carbon)	$27.84
FLAS1608B	Square Angle Iron Flange, 16" x 3/16" (plain carbon)	$38.22
FLAS1808B	Square Angle Iron Flange, 18" x 3/16"(plain carbon)	$45.40

SQUARE FLANGES

Flat, Galvanized

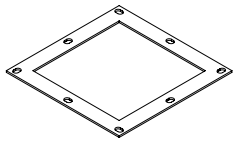

PART NUMBER	DESCRIPTION	LIST PRICE
FLFS0610GN	Square Flange (flat) 6", 10 gauge (galvanized)	$15.10
FLFS0810GN	Square Flange (flat) 8", 10 gauge (galvanized)	$19.92
FLFS1010GN	Square Flange (flat) 10", 10 gauge (galvanized)	$20.82
FLFS1210GN	Square Flange (flat) 12", 10 gauge (galvanized)	$21.73
FLFS1410GN	Square Flange (flat) 14", 10 gauge (galvanized)	$24.50

SQUARE LOAD OUT HINGE

Galvanized

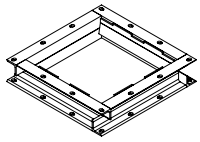

PART NUMBER	DESCRIPTION	LIST PRICE
SLH08	Square Load Out Hinge, 8″ (galvanized)	$179.00
SLH10	Square Load Out Hinge, 10″ (galvanized)	$184.00
SLH12	Square Load Out Hinge, 12″ (galvanized)	$196.00
SLH14	Square Load Out Hinge, 14″ (galvanized)	$230.00
SLH16	Square Load Out Hinge, 16″ (galvanized)	$288.00
SLH18	Square Load Out Hinge, 18″ (galvanized)	$345.00
SLH20	Square Load Out Hinge, 20″ (galvanized)	$380.00
SLH24	Square Load Out Hinge, 24″ (galvanized)	$414.00

SQUARE SPOUT CAPS

Galvanized

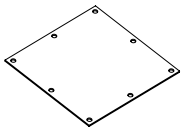

PART NUMBER	DESCRIPTION	LIST PRICE
PLFS0610GN	Square Spout Caps, 6", 10 gauge (galvanized)	$21.00
PLFS0810GN	Square Spout Caps, 8", 10 gauge (galvanized)	$22.63
PLFS1010GN	Square Spout Caps, 10", 10 gauge (galvanized)	$23.77
PLFS1210GN	Square Spout Caps, 12", 10 gauge (galvanized)	$32.82
PLFS1410GN	Square Spout Caps, 14", 10 gauge (galvanized)	$60.00

SQUARE WEDGES

10° and 45°, Galvanized

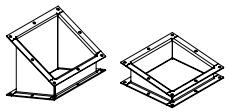

PART NUMBER	DESCRIPTION	10 GAUGE LIST PRICE	8 GAUGE LIST PRICE	1/4" Urethane Lined (Add)	1/4" Ceramic Tile Lined (Add)
WGFS06**GN	Square Wedge, 6"	$70.00	*	$151.00	$192.00
WGFS08**GN	Square Wedge, 8"	$78.00	$95.00	$159.00	$211.00
WGFS10**GN	Square Wedge, 10"	$87.00	$120.00	$173.00	$230.00
WGFS12**GN	Square Wedge, 12"	$101.00	$128.00	$230.00	$300.00
WGFS14**GN	Square Wedge, 14"	$118.00	$147.00	$245.00	$321.00
WGFS16**GN	Square Wedge, 16"	$125.00	$168.00	$266.00	$360.00

HIP STYLE ELBOWS, 45D

Galvanized

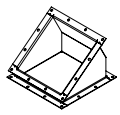

PART NUMBER	DESCRIPTION	10 GAUGE LIST PRICE	8 GAUGE LIST PRICE	1/4" Urethane Lined (Add)	1/4" Ceramic Tile Lined (Add)
ELSQ06**45GN	Square Fixed Elbow (Hip-Style), 6", 45°	$180.00	-	$165.00	$208.00
ELSQ08**45GN	Square Fixed Elbow (Hip-Style), 8", 45°	$204.00	$216.00	$172.00	$230.00
ELSQ10**45GN	Square Fixed Elbow (Hip-Style), 10", 45°	$240.00	$282.00	$188.00	$250.00
ELSQ12**45GN	Square Fixed Elbow (Hip-Style), 12", 45°	$264.00	$298.00	$250.00	$327.00
ELSQ14**45GN	Square Fixed Elbow (Hip-Style), 14", 45°	$288.00	$299.00	$267.00	$349.00
ELSQ16**45GN	Square Fixed Elbow (Hip-Style), 16", 45°	$290.00	$322.00	$290.00	$391.00
ELSQ18**45GN	Square Fixed Elbow (Hip-Style), 18", 45°	$317.00	$368.00	$329.00	$441.00
ELSQ20**45GN	Square Fixed Elbow (Hip-Style), 20", 45°	$403.00	$480.00	$336.00	$452.00
ELSQ24**45GN	Square Fixed Elbow (Hip-Style), 24", 45°	$540.00	$600.00	$450.00	$525.00

Y AND K STYLE BRANCHES, 45D

Galvanized

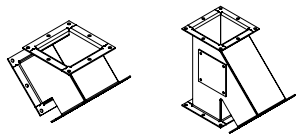

PART NUMBER	DESCRIPTION	10 GAUGE LIST PRICE	8 GAUGE LIST PRICE	1/4" Urethane Lined (Add)	1/4" Ceramic Tile Lined (Add)
BRSY06**45GN	Branch (square), "Y Style", 6", 45°	$253.00	-	$344.00	$430.00
BRSY08**45GN	Branch (square), "Y Style", 8", 45°	$288.00	$288.00	$391.00	$489.00
BRSY10**45GN	Branch (square), "Y Style", 10", 45°	$311.00	$322.00	$422.00	$528.00
BRSY12**45GN	Branch (square), "Y Style", 12", 45°	$345.00	$368.00	$469.00	$586.00
BRSY14**45GN	Branch (square), "Y Style", 14", 45°	$460.00	$575.00	$625.00	$782.00
BRSK06**45GN	Branch (square), "K Style", 6", 45°	$253.00	-	$344.00	$430.00
BRSK08**45GN	Branch (square), "K Style", 8", 45°	$288.00	$288.00	$391.00	$489.00
BRSK10**45GN	Branch (square), "K Style", 10", 45°	$311.00	$334.00	$422.00	$525.00
BRSK12**45GN	Branch (square), "K Style", 12", 45°	$345.00	$368.00	$469.00	$586.00
BRSKY14**45GN	Branch (square), "K Style", 14", 45°	$460.00	$575.00	$625.00	$782.00

THREE-WAY STYLE BRANCHES, 45D

Galvanized

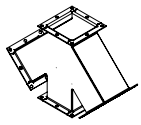

PART NUMBER	DESCRIPTION	10 GAUGE LIST PRICE	8 GAUGE LIST PRICE	1/4" Urethane Lined (Add)	1/4" Ceramic Tile Lined (Add)
BRST06**45GN	Branch (square), "3-Way Style", 6", 45°	$368.00	-	$500.00	$625.00
BRST08**45GN	Branch (square), "3-Way Style", 8", 45°	$403.00	$460.00	$547.00	$684.00
BRST10**45GN	Branch (square), "3-Way Style", 10", 45°	$437.00	$506.00	$594.00	$743.00
BRST12**45GN	Branch (square), "3-Way Style", 12", 45°	$460.00	$575.00	$625.00	$782.00
BRST14**45GN	Branch (square), "3-Way Style", 14", 45°	$575.00	$748.00	$782.00	$977.00

ROUND SPOUTING

PART NUMBER	DESCRIPTION	SIZE	14 GAUGE LIST PRICE	12 GAUGE LIST PRICE	10 GAUGE LIST PRICE	7 GAUGE LIST PRICE	1/4" LIST PRICE
SPRD04**GN	Galvanized Round Spouting	4"	CALL FOR PRICING				
SPRD05**GN	Galvanized Round Spouting	5"					
SPRD06**GN	Galvanized Round Spouting	6"					
SPRD08**GN	Galvanized Round Spouting	8"					
SPRD10**GN	Galvanized Round Spouting	10"					
SPRD12**GN	Galvanized Round Spouting	12"					
SPRD14**GN	Galvanized Round Spouting	14"					
SPRD16**GN	Galvanized Round Spouting	16"					

ROUND SPOUT WEIGHTS (PER FOOT)

SIZE	14 GAUGE	12 GAUGE	10 GAUGE	7 GAUGE	1/4" WALL
4	3.2	-	-	-	-
5	-	5.6	-	-	-
6	4.8	6.8	-	-	-
8	-	-	11.6	15.6	20.7
10	-	-	14.5	19.7	26
12	-	-	17.5	23.7	31.4
14	-	-	20.4	27.7	36.7
16	-	-	-	31.7	42.1
18	-	-	-	-	48
20	-	-	-	-	53
24	-	-	-	-	64

ROUND SPOUT CAPACITIES

SIZE	SQ INCHES	BPH (UNLINED)
6	28	1500
8	50	3,500
10	78	5,500
12	113	8,000
14	154	10,500
16	201	14,000
18	254	18,000
20	315	22,000
24	452	27,000

SPOUT LOADOUT SOCKS

Loadout socks are designed to control the dust on your loadout spouts. Each set comes with a flange and band to hold the sock in place. Socks are made of a heavy duty polyester material with a sewn seam. Socks come in 5′ lengths.

PART NUMBER	DESCRIPTION	LIST PRICE
DCLSS06X5	Spout Loadout Sock, 6" x 5' long	$245.00
DCLSS08X5	Spout Loadout Sock, 8" x 5' long	$255.00
DCLSS10X5	Spout Loadout Sock, 10" x 5' long	$305.00
DCLSS12X5	Spout Loadout Sock, 12" x 5' long	$315.00
DCLSS14X5	Spout Loadout Sock, 14" x 5' long	$328.00
DCLSS16X5	Spout Loadout Sock, 16" x 5' long	$372.00
DCLSS18X5	Spout Loadout Sock, 18" x 5' long	$378.00
DCLSS20X5	Spout Loadout Sock, 20" x 5' long	$384.00

ADJUSTABLE ELBOWS (GALVANIZED)

SIZE	GAUGE	LINER OPTION	22 ½° LIST	45° LIST	67 ½° LIST
6″	7	NO LINER	$29.10	$66.80	$104.50
6″	7	BLUE URETHANE	$106.25	$221.10	$335.95
6″	7	CERAMIC TILE	$117.61	$243.82	$370.03
8″	7	NO LINER	$49.00	$108.61	$168.22
8″	7	BLUE URETHANE	$140.00	$290.61	$441.22
8″	7	CERAMIC TILE	$164.00	$337.00	$510.00
10″	7	NO LINER	$64.00	$139.42	$214.84
10″	7	BLUE URETHANE	$155.00	$321.42	$487.84
10″	7	CERAMIC TILE	$195.00	$400.00	$605.00
12″	7	NO LINER	$74.00	$162.00	$250.00
12″	7	BLUE URETHANE	$175.00	$364.00	$553.00
12″	7	CERAMIC TILE	$249.00	$512.00	$775.00
14″	7	NO LINER	$90.00	$203.00	$316.00
14″	7	BLUE URETHANE	$210.00	$443.00	$667.00
14″	7	CERAMIC TILE	$267.95	$558.90	$849.85
16″	7	NO LINER	$115.00	$262.55	$410.10
16″	¼″	NO LINER	$120.00	$272.55	$425.10
16″	7	BLUE URETHANE	$275.00	$582.55	$890.10
16″	7	CERAMIC TILE	$368.50	$769.55	$1,170.60
18″	7	NO LINER	$165.00	$375.00	$585.00
18″	¼″	NO LINER	$232.00	$509.00	$786.00
18″	7	BLUE URETHANE	$307.81	$660.62	$1,013.44
18″	7	CERAMIC TILE	$436.89	$913.14	$1,389.39
20″	7	NO LINER	$200.00	$453.37	$706.74
20″	¼″	NO LINER	$248.75	$542.49	$836.23
20″	7	BLUE URETHANE	$433.75	$912.50	$1,467.50
20″	7	CERAMIC TILE	$583.28	$1,213.79	$1844.30
24″	7	NO LINER	$300.00	$675.00	$1,049.99
24″	¼″	NO LINER	$312.50	$699.00	$1.087.48
24″	7	BLUE URETHANE	$528.00	$1,130.99	$1,734.00
24″	7	CERAMIC TILE	$623.75	$1,322.50	$2,021.23

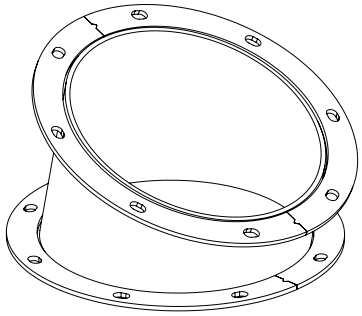

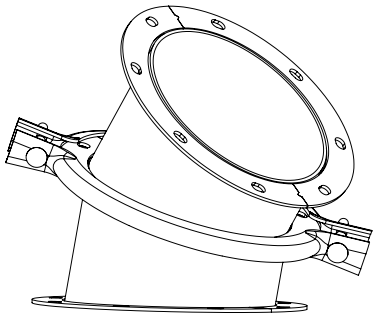

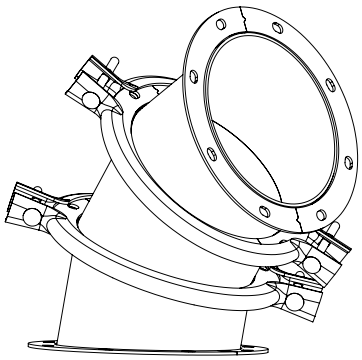

INSPECTION DOOR

Inspection Door
-Placed for easy access
to the grain cushion.

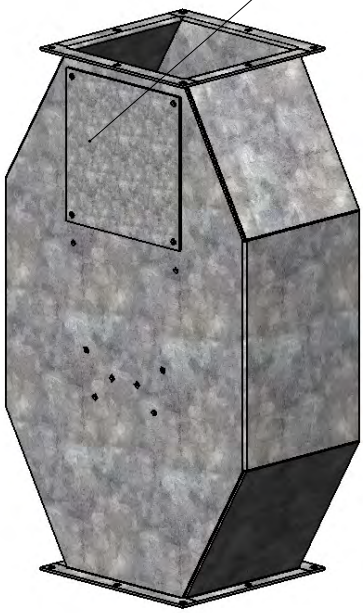

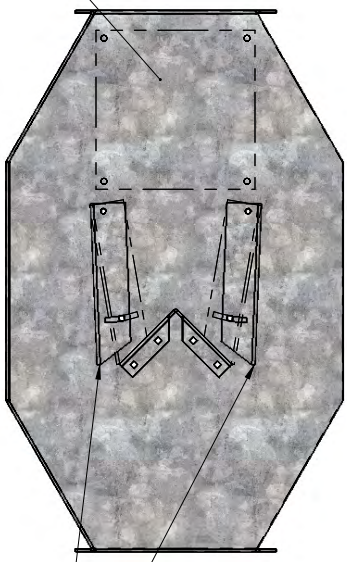

Adjustable baffles to allow for self-cleaning in full flow applications and for total flow restriction in low flow applications to ensure grain quality.

Ample room to ensure no grain clogging

Pocket fills with grain and creates a cushion for incoming grain

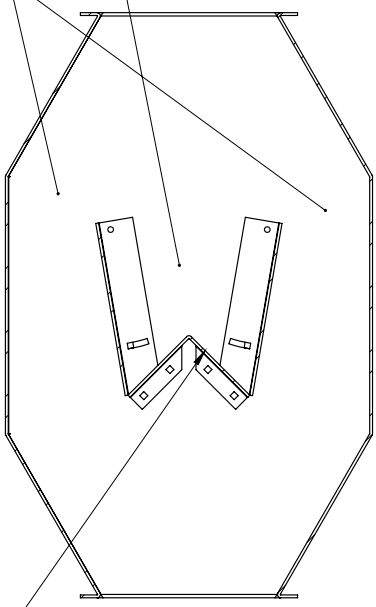

Angled center baffle aids in clearing the cushion pocket when adjustable baffels are set for self cleaning

SECTION A-A

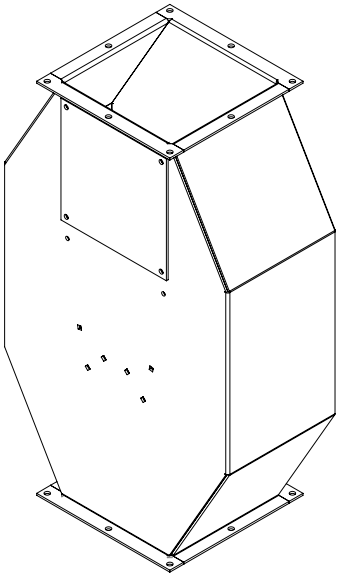

INLINE FLOW RETARDER

Round In/Round Out, Galvanized

- For use in vertical spout runs every 30′ to 40′
- Inspection port for viewing/adjusting baffle
- Adjustable baffle for self-cleaning
- Larger sizes available upon request
- Liner does not include outlet transition

PART NUMBER	SIZE	GAUGE	LIST PRICE
FRIS0610GN-R	6	10	$450
FRIS0810GN-R	8	10	$569
FRIS1010GN-R	10	10	$585
FRIS1210GN-R	12	10	$652
FRIS0808GN-R	8	8	$766
FRIS1008GN-R	10	8	$773
FRIS1208GN-R	12	8	$860
FRIS1408GN-R	14	8	$968

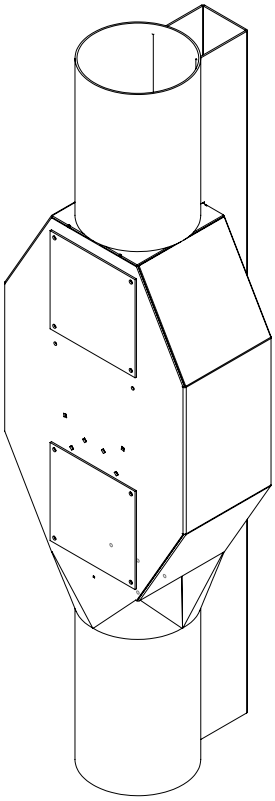

FLOW RETARDER w/WELDING SLEEVE

Round In/Round Out, Galvanized

- Recommended for use in angled spout runs more than 40′
- 2 Inspection ports for viewing/adjusting baffle
- Adjustable baffle for self-cleaning
- Larger sizes available upon request

PART NUMBER	SIZE	GAUGE	LIST PRICE
FRIR0610GN	6	10	$748
FRIR0810GN	8	10	$820
FRIR1008GN	10	8	$900
FRIR1208GN	12	8	$1,161
FRIR1408GN	14	8	$1,191
FRIR1608GN	16	8	$1,255

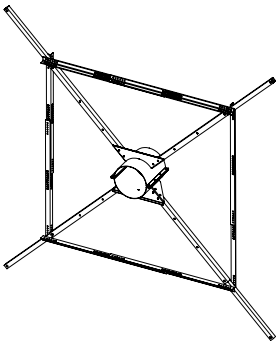

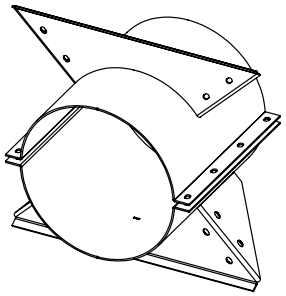

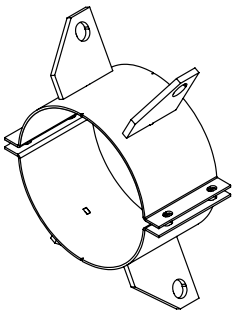

ROUND SPOUT TRUSS KITS

Galvanized

PART NUMBER	SIZE	WITHOUT CABLE	WITH CABLE
40' RUN			
PTK0640	6" x 40'	$1,112.00	$1,353.00
PTK0840	8" x 40'	$1,140.00	$1,384.00
PTK1040	10" x 40'	$1,250.00	$1,493.00
PTK1240	12" x 40'	$1,343.00	$1,587.00
PTK1440	14" x 40'	$1,421.00	$1,536.00
PTK1640	16" x 40'	$1,517.00	$1,722.00
60' RUN			
PTK0660	6" x 60'	$1,296.00	$1,694.00
PTK0860	8" x 60'	$1,336.00	$1,772.00
PTK1060	10" x 60'	$1,366.00	$1,795.00
PTK1260	12" x 60'	$1,585.00	$1,834.00
PTK1460	14" x 60'	$1,631.00	$1,905.00
PTK1660	16" x 60'	$1,837.00	$1,722.00
80' RUN			
PTK0680	6" x 80'	$2,511.00	$2,886.00
PTK0880	8" x 80'	$2,574.00	$2,949.00
PTK1080	10" x 80'	$2,637.00	$3,097.00
PTK1280	12" x 80'	$2,808.00	$3,270.00
PTK1480	14" x 80'	$3,136.00	$3,596.00
PTK1680	16" x 80'	$3,572.00	$4,110.00
100' RUN			
PTK06100	6" x 100'	$2,511.00	$2,974.00
PTK08100	8" x 100'	$2,574.00	$3,035.00
PTK10100	10" x 100'	$2,637.00	$3,167.00
PTK12100	12" x 100'	$2,808.00	$3,470.00
PTK14100	14" x 100'	$3,136.00	$3,618.00
PTK16100	16" x 100'	$3,659.00	$4,298.00
100' ALT RUN			
PTK06100A	6" x 100'	---	---
PTK08100A	8" x 100'	---	---
PTK10100A	10" x 100'	$3,547.00	$4,035.00
PTK12100A	12" x 100'	$3,779.00	$4,269.00
PTK14100A	14" x 100'	$5,633.00	$6,145.00
PTK16100A	16" x 100'	$6,713.00	$7,386.00

40' SPOUT

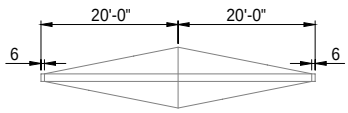

60' SPOUT

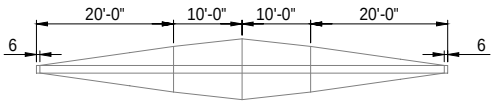

80' SPOUT

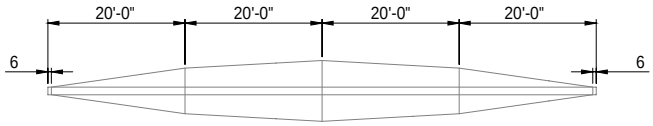

100' SPOUT

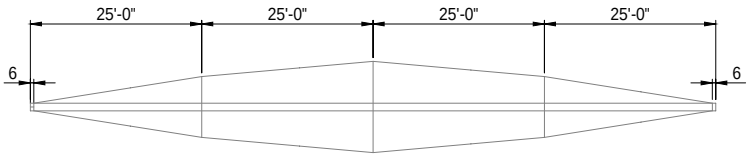

OPTIONAL 100' SPOUT

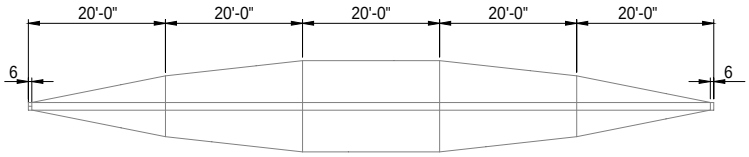

****ALL TRUSS KITS INCLUDE 2 SETS OF END ANCHORS****

40' TRUSS KIT (6" - 8"): (1) 2' Primary Truss
40' TRUSS KIT (10" - 12"): (1) 3' Primary Truss
40' TRUSS KIT (14" - 16"): (1) 4' Primary Truss

60' TRUSS KIT (6" - 8"): (1) 4' Primary Truss
60' TRUSS KIT (10" - 14"): (1) 5' Primary Truss

80' TRUSS KIT (6" - 12"): (1) 4' Primary Truss
(2) 3' Secondary Trusses

80' TRUSS KIT (14" - 16"): (1) 5' Primary Truss
(2) 4' Secondary Trusses

100' TRUSS KIT (6" - 10"): (1) 4' Primary Truss
(2) 3' Secondary Trusses

100' TRUSS KIT (12" - 16"): (1) 5' Primary Truss
(2) 4' Secondary Trusses

100' ALT TRUSS KIT (10"): (1) 4' Primary Truss
(2) 3' Secondary Trusses

100' ALT TRUSS KIT (12"): (1) 5' Primary Truss
(2) 4' Secondary Trusses

100' ALT TRUSS KIT (12" - 16"): (2) 6' Primary Trusses
(2) 5' Secondary Trusses
(2) 4' Secondary Trusses

CABLE

Galvanized

PART NUMBER	DESCRIPTION	PRICE
CABLE316	Cable, 3/16" (galvanized aircraft)	$0.27
CABLE516	Cable, 5/16" (galvanized aircraft)	$0.58
CABLE38	Cable, 3/8" (galvanized aircraft)	$0.87
CABLE12	Cable, 1/2" (galvanized aircraft)	$1.32
CABLE58	Cable, 5/8" (galvanized aircraft)	$2.00

TURNBUCKLES

Galvanized

PART NUMBER	DESCRIPTION	PRICE
TB58x9JE	Turnbuckle, 5/8" x 9" (Jaw to Eye) (galvanized)	$25.00
TB58x12JE	Turnbuckle, 5/8" x 12" (Jaw to Eye) (galvanized)	$27.43

CABLE CLAMPS

Galvanized

PART NUMBER	DESCRIPTION	PRICE
CC316	Cable Clamp, 3/16" (galvanized)	$0.33
CC516	Cable Clamp, 5/16" (galvanized)	$0.57
CC38	Cable Clamp, 3/8" (galvanized)	$1.07
CC12	Cable Clamp, 1/2" (galvanized)	$1.80

HOT HOUSE PULLEY

Galvanized

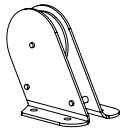

PART NUMBER	DESCRIPTION	PRICE
HHPZ	Hot House Pulley (galvanized)	$20.00

CLAMP BANDS

Galvanized Clamp Bands include hardware.

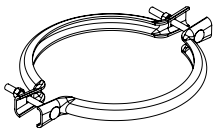

PART NUMBER	DESCRIPTION	PRICE
CB0610GN	Clamp Band, 6" (galvanized) w/hardware)	$8.60
CB0810GN	Clamp Band, 8" (galvanized) w/hardware)	$10.61
CB1010GN	Clamp Band, 10" (galvanized) w/hardware)	$11.42
CB1210GN	Clamp Band, 12" (galvanized) w/hardware)	$14.00
CB1410GN	Clamp Band, 14" (galvanized) w/hardware)	$23.00
CB1610GN	Clamp Band, 16" (galvanized) w/hardware)	$32.55
CB1810GN	Clamp Band, 18" (galvanized) w/hardware)	$45.00
CB2010GN	Clamp Band, 20" (galvanized) w/hardware)	$53.37
CB2410GN	Clamp Band, 24" (galvanized) w/hardware)	$74.99

ROUND FLANGES

Flat, Glavanized

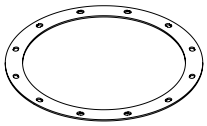

PART NUMBER	DESCRIPTION	PRICE
FLFR0610GN	Round Flange (flat) 6", 10 gauge (galvanized)	$10.25
FLFR0810GN	Round Flange (flat) 8", 10 gauge (galvanized)	$13.00
FLFR1010GN	Round Flange (flat) 10", 10 gauge (galvanized)	$17.00
FLFR1210GN	Round Flange (flat) 12", 10 gauge (galvanized)	$19.00
FLFR1410GN	Round Flange (flat) 14", 10 gauge (galvanized)	$22.00

WELDING SLEEVES

Welding sleeves are manufactured out of pre-galvanized material.

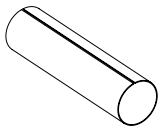

PART NUMBER	DESCRIPTION	PRICE
SWSR0612GN	Spout Welding Sleeve, 6", 12 gauge (galvanized), 24" long	Call
SWSR0812GN	Spout Welding Sleeve, 8", 12 gauge (galvanized), 24" long	$82.36
SWSR1012GN	Spout Welding Sleeve, 10", 12 gauge (galvanized), 24" long	$94.13
SWSR1212GN	Spout Welding Sleeve, 12", 12 gauge (galvanized), 24" long	$100.00
SWSR1410GN	Spout Welding Sleeve, 14", 10 gauge (galvanized), 24" long	$110.00
SWSR1610GN	Spout Welding Sleeve, 16", 10 gauge (galvanized), 24" long	$120.00
SWSR1810GN	Spout Welding Sleeve, 18", 10 gauge (galvanized), 24" long	$150.00
SWSR2010GN	Spout Welding Sleeve, 20", 10 gauge (galvanized), 24" long	$190.00
SWSR2410GN	Spout Welding Sleeve, 24", 10 gauge (galvanized), 24" long	$210.00

SPOUT SADDLES

Spout Saddles are manufactured out of pre-galvanized material and come with hardware.

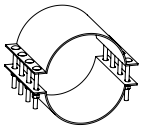

PART NUMBER	DESCRIPTION	PRICE
SPSA0610GN	Spout Saddles, 6", 10 gauge (galvanized), 8" long	$63.53
SPSA0810GN	Spout Saddles, 8", 10 gauge (galvanized), 8" long	$67.65
SPSA1010GN	Spout Saddles, 10", 10 gauge (galvanized), 8" long	$82.10
SPSA1210GN	Spout Saddles, 12", 10 gauge (galvanized), 8" long	$103.76
SPSA1410GN	Spout Saddles, 14", 10 gauge (galvanized), 8" long	$110.98
SPSA1610GN	Spout Saddles, 16", 10 gauge (galvanized), 8" long	$125.43

ROUND ANGLE RINGS

Plain Carbon

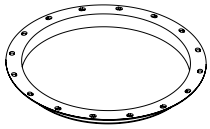

PART NUMBER	DESCRIPTION	PRICE
FLAR0610B	Angle Ring, 6" (plain carbon)	$8.33
FLAR0807B	Angle Ring, 8" (plain carbon)	$9.01
FLAR1007B	Angle Ring, 10" (plain carbon)	$11.24
FLAR1207B	Angle Ring, 12" (plain carbon)	$17.65
FLAR1407B	Angle Ring, 14" (plain carbon)	$18.89
FLAR1607B	Angle Ring, 16" (plain carbon)	$25.00
FLAR1807B	Angle Ring, 18" (plain carbon)	$28.04
FLAR2007B	Angle Ring, 20" (plain carbon)	$33.05
FLAR2207B	Angle Ring, 22" (plain carbon)	$39.00
FLAR2407B	Angle Ring, 24" (plain carbon)	$41.80

ROUND SPOUT CAPS

Round caps are manufactured out of pre-galvanized material.

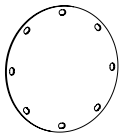

PART NUMBER	DESCRIPTION	PRICE
PLFR0610GN	Round Spout Caps, 6", 10 gauge (galvanized)	$14.00
PLFR0810GN	Round Spout Caps, 8", 10 gauge (galvanized)	$21.00
PLFR1010GN	Round Spout Caps, 10", 10 gauge (galvanized)	$22.00
PLFR1210GN	Round Spout Caps, 12", 10 gauge (galvanized)	$32.00
PLFR1410GN	Round Spout Caps, 14", 10 gauge (galvanized)	$55.00

EXPANSION JOINTS

Galvanized

- Larger sizes available upon request

PART NUMBER	SIZE	GAUGE	PRICE
EJRD0810GN	8	10	$344.00
EJRD0808GN	8	8	$440.00
EJRD1010GN	10	10	$366.00
EJRD1008GN	10	8	$416.00
EJRD1208GN	12	8	$520.00
EJRD1408GN	14	8	$623.00

SPOUT SLEEVES

Spout Sleeves are manufactured out of pre-galvanized material and come with hardware.

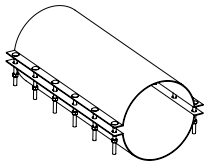

PART NUMBER	DESCRIPTION	PRICE
SPPA0612GN	Spout Sleeves, 6", 12 gauge (galvanized), 24" long	$90.22
SPPA0812GN	Spout Sleeves, 8", 12 gauge (galvanized), 24" long	$95.50
SPPA1012GN	Spout Sleeves, 10", 12 gauge (galvanized), 24" long	$115.49
SPPA1212GN	Spout Sleeves, 12", 12 gauge (galvanized), 24" long	$135.50
SPPA1412GN	Spout Sleeves, 14", 12 gauge (galvanized), 24" long	$142.05
SPPA1612GN	Spout Sleeves, 16", 12 gauge (galvanized), 24" long	$150.95

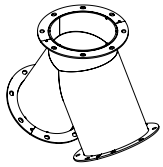

Y-STYLE ROUND BRANCH 45°

Galvanized

60° available upon request

PART NUMBER	DESCRIPTION	LIST PRICE
BRPY061045GN	Branch (round), "Y Style", 6", 10 gauge, 45 degree (galvanized)	$161.00
BRPY081045GN	Branch (round), "Y Style", 8", 10 gauge, 45 degree (galvanized)	$202.00
BRPY101045GN	Branch (round), "Y Style", 10", 10 gauge, 45 degree (galvanized)	$238.00
BRPY121045GN	Branch (round), "Y Style", 12", 10 gauge, 45 degree (galvanized)	$302.00
BRPY141045GN	Branch (round), "Y Style", 14", 10 gauge, 45 degree (galvanized)	$341.00
BRPY080845GN	Branch (round), "Y Style", 8", 8 gauge, 45 degree (galvanized)	$232.00
BRPY100845GN	Branch (round), "Y Style", 10", 8 gauge, 45 degree (galvanized)	$288.00
BRPY120845GN	Branch (round), "Y Style", 12", 8 gauge, 45 degree (galvanized)	$338.00
BRPY140845GN	Branch (round), "Y Style", 14", 8 gauge, 45 degree (galvanized)	$445.00

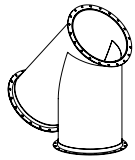

OFFSET STYLE ROUND BRANCH 45°

Galvanized

60° available upon request

PART NUMBER	DESCRIPTION	LIST PRICE
BRPK061045GN	Branch (round), "Offset Style", 6", 10 gauge, 45 degree (galvanized)	$193.00
BRPK081045GN	Branch (round), "Offset Style", 8", 10 gauge, 45 degree (galvanized)	$228.00
BRPK101045GN	Branch (round), "Offset Style", 10", 10 gauge, 45 degree (galvanized)	$247.00
BRPK121045GN	Branch (round), "Offset Style", 12", 10 gauge, 45 degree (galvanized)	$346.00
BRPK141045GN	Branch (round), "Offset Style", 14", 10 gauge, 45 degree (galvanized)	$403.00
BRPK080845GN	Branch (round), "Offset Style", 8", 8 gauge, 45 degree (galvanized)	$262.00
BRPK100845GN	Branch (round), "Offset Style", 10", 8 gauge, 45 degree (galvanized)	$304.00
BRPK120845GN	Branch (round), "Offset Style", 12", 8 gauge, 45 degree (galvanized)	$423.00
BRPK140845GN	Branch (round), "Offset Style", 14", 8 gauge, 45 degree (galvanized)	$442.00

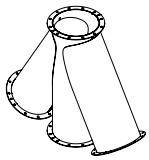

OFFSET STYLE ROUND BRANCH 45°

Galvanized

60° available upon request

PART NUMBER	DESCRIPTION	LIST PRICE
BRPT061045GN	Branch (round), "Three-Way Style", 6", 10 gauge, 45 degree (galvanized)	$270.00
BRPT081045GN	Branch (round), "Three-Way Style", 8", 10 gauge, 45 degree (galvanized)	$333.00
BRPT101045GN	Branch (round), "Three-Way Style", 10", 10 gauge, 45 degree (galvanized)	$348.00
BRPT121045GN	Branch (round), "Three-Way Style", 12", 10 gauge, 45 degree (galvanized)	$465.00
BRPT141045GN	Branch (round), "Three-Way Style", 14", 10 gauge, 45 degree (galvanized)	$555.00
BRPT080845GN	Branch (round), "Three-Way Style", 8", 8 gauge, 45 degree (galvanized)	$389.00
BRPT100845GN	Branch (round), "Three-Way Style", 10", 8 gauge, 45 degree (galvanized)	$428.00
BRPT120845GN	Branch (round), "Three-Way Style", 12", 8 gauge, 45 degree (galvanized)	$613.00
BRPT140845GN	Branch (round), "Three-Way Style", 14", 8 gauge, 45 degree (galvanized)	$636.00

SQUARE TO ROUND

Galvanized

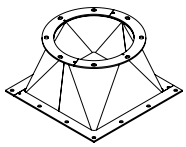

PART NUMBER	SQUARE SIDE	ROUND SIDE	10 GAUGE	8 GAUGE	URETHANE LINED	1/4" CERAMIC TILE LINE
TRSR0606*GN	6″	6"	$101.00	*	$233.00	$251.00
TRSR0808*GN	8″	8"	$109.00	$140.00	$246.00	$260.00
TRSR0806*GN	8″	6"	$151.00	*	$294.00	$310.00
TRSR1010*GN	10″	10"	$123.00	$183.00	$329.00	$350.00
TRSR1008*GN	10″	8"	$143.00	$185.00	$341.00	$399.00
TRSR1212*GN	12″	12"	$152.00	$266.00	$456.00	$475.00
TRSR1210*GN	12″	10"	$162.00	$270.00	$441.00	$460.00
TRSR1414*GN	14″	14"	$174.00	$275.00	$489.00	$535.00
TRSR1412*GN	14″	12"	$197.00	$280.00	$508.00	$490.00
TRSR1410*GN	14″	10"	$239.00	$300.00	$547.00	$565.00
TRSR1616*GN	16″	16"	$250.00	$310.00	$562.00	$584.00
TRSR1614*GN	16″	14"	$243.00	$320.00	$580.00	$594.00
TRSR1818*GN	18″	18″	*	$400.00	$413.00	$699.00

ROUND TO ROUND

Galvanized

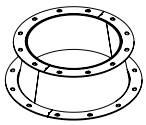

PART NUMBER	DESCRIPTION	LIST PRICE
TRRR080610GN	Transition, 8" round to 6" round, 10 gauge	$121.00
TRRR100810GN	Transition, 10" round to 8" round, 10 gauge	$150.00
TRRR121010GN	Transition, 12" round to 10" round, 10 gauge	$190.00
TRRR141210GN	Transition, 14" round to 12" round, 10 gauge	$200.00
TRRR100808GN	Transition, 10" round to 8" round, 8 gauge	$172.00
TRRR121008GN	Transition, 12" round to 10" round, 8 gauge	$185.00
TRRR141208GN	Transition, 14" round to 12" round, 8 gauge	$215.00
TRRR100610GN	Transition, 10" round to 6" round, 10 gauge	$171.00
TRRR120810GN	Transition, 12" round to 8" round, 10 gauge	$159.00
TRRR141010GN	Transition, 14" round to 10" round, 10 gauge	$180.00
TRRR120808GN	Transition, 12" round to 8" round, 8 gauge	$181.00
TRRR141008GN	Transition, 14" round to 10" round, 8 gauge	$215.00

FLAT TOP ADAPTERS

Galvanized

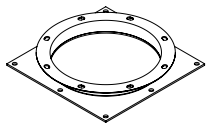

PART NUMBER	DESCRIPTION	LIST PRICE
FTSR060610GN	Flat Top Adapter, 6" 10 gauge	$32.00
FTSR080810GN	Flat Top Adapter, 8" 10 gauge	$41.00
FTSR101010GN	Flat Top Adapter, 10" 10 gauge	$42.00
FTSR121210GN	Flat Top Adapter, 12" 10 gauge	$58.00
FTSR141410GN	Flat Top Adapter, 14" 10 gauge	$73.00
FTSR161610GN	Flat Top Adapter, 16" 10 gauge	$90.00
FTSR181810GN	Flat Top Adapter, 18" 10 gauge	$131.00
FTSR080808GN	Flat Top Adapter, 8" 8 gauge	$44.00
FTSR101008GN	Flat Top Adapter, 10" 8 gauge	$112.00
FTSR121208GN	Flat Top Adapter, 12" 8 gauge	$75.00
FTSR141408GN	Flat Top Adapter, 14" 8 gauge	$89.00
FTSR161608GN	Flat Top Adapter, 16" 8 gauge	$122.50
FTSR181808GN	Flat Top Adapter, 18" 8 gauge	$150.00
FTSR202008GN	Flat Top Adapter, 20" 8 gauge	$175.00
FTSR242408GN	Flat Top Adapter, 24" 8 gauge	$187.49

SQUARE TO SQUARE

Galvanized

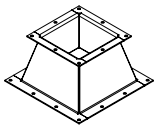

PART NUMBER	DESCRIPTION	LIST PRICE
TRSS080610GN	Transition, 8" square to 6" square, 10 gauge	$87.00
TRSS100810GN	Transition, 10" square to 8" square, 10 gauge	$98.00
TRSS121010GN	Transition, 12" square to 10" square, 10 gauge	$118.00
TRSS141210GN	Transition, 14" square to 12" square, 10 gauge	$141.00
TRSS100808GN	Transition, 10" square to 8" square, 8 gauge	$108.00
TRSS121008GN	Transition, 12" square to 10" square, 8 gauge	$147.00
TRSS141208GN	Transition, 14" square to 12" square, 8 gauge	$177.00

(888) 963-9145

We manufacture custom transitions!
Contact us today for configurations not listed.

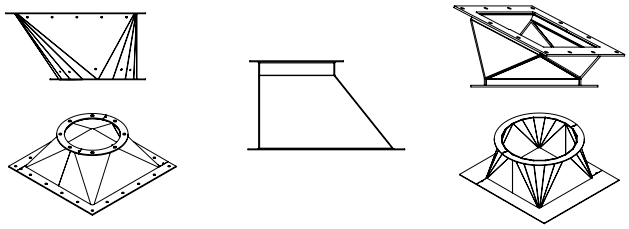

ROUND ADJUSTABLE CUSHION BOX

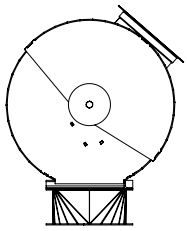

Larger sizes available upon request
Liner options do not include square to round transition
Priced as Round In/Round Out
1/4 inch Baffles

PART NUMBER	SIZE	10 GAUGE PRIMED	8 GAUGE PRIMED	10 GAUGE GALVANIZED	8 GAUGE GALVANIZED	1/4" BLUE URETHANE LINED (Add)	1/4" CERAMIC TILE LINED (Add)
DBAC06	6	$310.00	-	$415.00	-	$171.73	$173.00
DBAC08	8	$330.00	$373.75	$425.00	$553.00	$171.73	$177.00
DBAC10	10	$366.25	$411.25	$495.00	$644.00	$197.14	$203.00
DBAC12	12	$461.25	$586.25	$586.25	$884.00	$305.96	$334.00
DBAC14	14	$521.25	$641.25	$638.56	$1,179.00	$331.84	$379.00
DBAC16	16	CALL	$821.25	-	$1,400.00	$386.94	$395.00

BOX STYLE DEADBOX

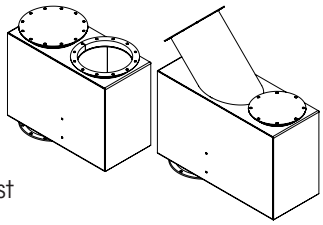

Galvanized

Larger sizes available upon request
Liner options available upon request

PART NUMBER	DESCRIPTION	10 GAUGE GALVANIZED	8 GAUGE GALVANIZED
DBFB061045GN	Box Style Deadbox, 6", 45 degree	$422.00	-
DBFB081045GN	Box Style Deadbox, 8", 45 degree	$481.00	$588.00
DBFB101045GN	Box Style Deadbox, 10", 45 degree	$607.00	$749.00
DBFB121045GN	Box Style Deadbox, 12", 45 degree	$767.00	$899.00
DBFB141045GN	Box Style Deadbox, 14", 45 degree	$922.50	$1,061.00

PART NUMBER	DESCRIPTION	10 GAUGE GALVANIZED	8 GAUGE GALVANIZED
DBFB061090GN	Box Style Deadbox, 6", 90 degree	$367.00	-
DBFB081090GN	Box Style Deadbox, 8", 90 degree	$433.00	$511.00
DBFB101090GN	Box Style Deadbox, 10", 90 degree	$515.00	$604.00
DBFB121090GN	Box Style Deadbox, 12", 90 degree	$626.00	$758.00
DBFB141090GN	Box Style Deadbox, 14", 90 degree	$716.00	$879.00

PIPE STYLE DEADBOX

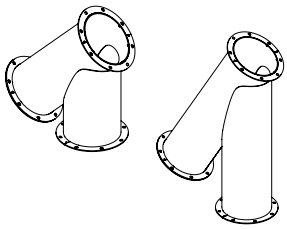

Galvanized

Larger sizes available upon request
Liner options available upon request

PART NUMBER	DESCRIPTION	10 GAUGE GALVANIZED	8 GAUGE GALVANIZED
DBFP061045GN	Pipe Style Deadbox, 6", 45 degree	$215.00	-
DBFP081045GN	Pipe Style Deadbox, 8", 45 degree	$230.00	$331.25
DBFP101045GN	Pipe Style Deadbox, 10", 45 degree	$285.00	$360.00
DBFP121045GN	Pipe Style Deadbox, 12", 45 degree	$360.00	$445.00
DBFP141045GN	Pipe Style Deadbox, 14", 45 degree	$455.00	$494.00

PART NUMBER	DESCRIPTION	10 GAUGE GALVANIZED	8 GAUGE GALVANIZED
DBFP061060GN	Pipe Style Deadbox, 6", 60 degree	$273.00	-
DBFP081060GN	Pipe Style Deadbox, 8", 60 degree	$335.00	$383.00
DBFP101060GN	Pipe Style Deadbox, 10", 60 degree	$401.00	$468.00
DBFP121060GN	Pipe Style Deadbox, 12", 60 degree	$575.00	$633.00
DBFP141060GN	Pipe Style Deadbox, 14", 60 degree	$845.00	$830.00

VERTICAL DROP CUSHION TURNOUT

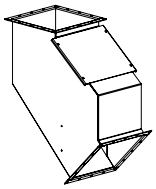

Galvanized
Square in/Square out
Larger sizes available upon request

SIZE	7 GAUGE PLATE with 7 GAUGE AR LINER	1/4" GAUGE PLATE with 1/4" GAUGE AR LINER
6	$526.00	$751.00
8	$549.00	$781.00
10	$676.00	$974.00
12	$799.00	$998.00
14	$899.00	$1,113.00
16	$990.00	$1,275.00

COLLECTOR BOX

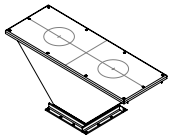

Galvanized
Larger sizes available upon request

PART NUMBER	10 GAUGE GALVANIZED	8 GAUGE GALVANIZED	1/4" BLUE URETHANE LINED (Add)	1/4" CERAMIC TILE LINED (Add)
COLB0808**GN	$524.00	$675.00	$235.00	$350.00
COLB1010**GN	$620.00	$828.00	$299.00	$430.00
COLB1212**GN	$699.00	$760.00	$391.00	$535.00
COLB1414**GN	$757.00	$1,063.00	$410.00	$550.00
COLB1616**GN	-	$1,100.00	$523.00	$700.00
COLB1818**GN	-	$1,313.00	$565.00	$722.00
COLB2020**GN	-	$1,609.00	$636.00	$756.00

OVERFLOW VALVES

Round In/Round Out, Galvanized

» Includes inspection port
» Larger sizes available upon request

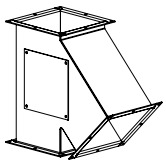

SIZE	10 GAUGE	8 GAUGE
6″	$411.91	-
8″	$537.00	$830.25
10″	$555.00	$965.00
12″	-	$1,200.75
14″	-	$1,260.75
16″	-	$1,325.00

SYNCHRONIZED OPEN BRANCH SLIDE GATES

Includes inspection port, Galvanized

» Larger sizes available upon request

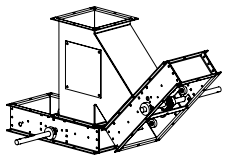

SIZE	10 GAUGE	8 GAUGE	ELECTRIC (ADD)
6″	$1,602.00	-	$1,813.00
8″	$1,643.00	$1,661.00	$1,813.00
10″	$1,726.00	$1,871.00	$1,813.00
12″	$2,014.00	$2,179.00	$1,813.00
14″	$2,167.00	$2,196.00	$1,813.00
16″	$2,326.00	$2,393.00	$1,813.00

OVERFLOW WITH INTERNAL 45° SLIDE GATE

Galvanized

» Includes (2) weather covers
» Larger sizes available upon request

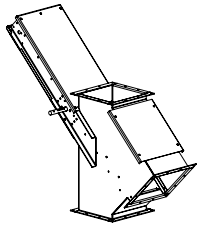

SIZE	10 GAUGE	8 GAUGE	ELECTRIC OPTION (ADD)	AR LINED (ADD)	1/4” CERAMIC TILE LINED (ADD)
6″	$995.00	-	$1,813.00	$120.00	$430.00
8″	-	$1,475.00	$1,813.00	$125.00	$489.00
10″	-	$1,515.00	$1,813.00	$160.00	$528.00
12″	-	$1,700.00	$1,813.00	$198.00	$586.00
14″	-	$1,799.00	$1,813.00	$224.00	$782.00
16″	-	$1,950.00	$1,813.00	$275.00	$815.00

SLIDE GATE Y-VALVE

Synchronized/Independent, Galvanized

» Includes (4) weather covers
» Larger sizes available upon request

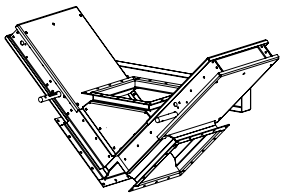

SIZE	10 GAUGE	8 GAUGE	ELECTRIC OPTION (ADD)	AR LINED (ADD)	1/4” CERAMIC TILE LINED (ADD)
6″	$1,618.00	-	$3,625.00	$120.00	$430.00
8″	$1,673.00	$1,729.00	$3,625.00	$125.00	$489.00
10″	$1,790.00	$1,879.00	$3,625.00	$160.00	$528.00
12″	$2,027.00	$2,135.00	$3,625.00	$198.00	$586.00
14″	$2,139.00	$2,368.00	$3,625.00	$224.00	$782.00
16″	$2,233.00	$2,679.00	$3,625.00	$275.00	$815.00

Unplug your bin from the seat of your tractor!

- The Sump Saver is designed to break up clumps and other obstacles approaching the center grain sump.
- This lets the farmer safely break up clumps and obstacles without entering the bin.
- Powered by a hydraulic motor (up to 6000 inch pounds of torque).
- ½" "clearing fingers" that rotate forward and reverse.

SUMP SAVER

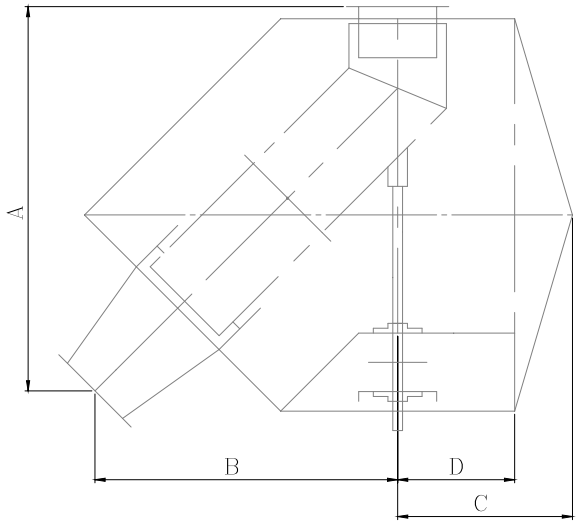

SIZE	NUMBER OF OUTLETS	A	B	C	D
8″	4	30 - 15/16″	22 - 9/16″	12″	12
8″	6	30 - 15/16″	22 - 9/16″	17 - 15/16″	12
8″	8	42 - 15/16″	34 - 9/16″	12″	12
8″	10	42 - 15/16″	34 - 9/16″	20 - 13/16″	12
10″	4	35 - 9/16″	26 - 3/4″	12″	12
10″	6	35 - 9/16″	26 - 3/4″	20 - 9/16″	12
10″	8	50 - 7/16″	41 - 11/16″	12″	12
10″	10	50 - 7/16″	41 - 11/16″	25 - 5/16″	12
12″	4	40 - 7/16″	31 - 3/16″	12″	12
12″	6	40 - 7/16″	3 - 3/16″	25 - 13/16″	12
12″	8	52 - 15/16″	43 - 11/16″	15″	15
12″	10	52 - 15/16″	43 - 11/16″	27 - 3/16″	15
14″	4	45 - 5/16″	35 - 11/16″	14″	14
14″	6	45 - 5/16″	35 - 11/16″	20 - 3/4″	14
14″	8	60 - 5/16″	50 - 11/16″	16″	16
14″	10	60 - 5/16″	50 - 11/16″	31 - 11/16″	16

(888) 963-9145

CONTACT LCDM FOR PRICING.

PLAIN CERAMIC TILE

SIZE	PRICE
1/4" x 4" x 6"	$4.00/ea.
1/4" x 2" x 6"	CALL
1/4" x 1" x 6"	CALL
1/4" x 1" x 4"	CALL
1/2" x 4" x 6"	$4.01/ea.

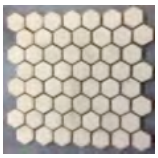

HEX CERAMIC TILE

SIZE	PRICE
1/4" x 6" x 6"	$4.25/ea.
1/2" x 6" x 6"	CALL

Colored tile (pink or brown) is available for equipment handling rice. Please call for pricing.

ADHESIVE/EPOXY KITS

2-PART EPOXY

This product is an industry standard epoxy tile adhesive. This product will have the strongest bond when installing plain or hex ceramic tiles. This product is formulated to provide a strong bond to most ceramic, metal, concrete, fiberglass and/or wood surfaces.

- Hex ceramic tiles
- Plain ceramic tiles
- Weldable ceramic tiles
- Coverage: 27 sq/ft (1/8" thick)

1 gallon KIT: $299/ea.
(includes 1 part "A" and 1 part "B")
Covers appropriately 27 sq/ft

3 gallon KIT: $499/ea.
(includes 3 part "A" and 3 part "B")
Covers appropriately 75 sq/ft

2-PART EPOXY W/ CERAMIC BEADS

This product is a specially formulated epoxy paste blended with small ceramic beads to help preserve the life of a particular product. Used for patching and repairing worn metal that is exposed to an abrasive environment.

- Pipe Elbows
- Cyclones
- Hoppers/Chutes
- Dust Collection Systems
- Grain Bins

$350/ea. KIT

LCDM LINERS

LCDM offers a range of high-performance wear-resistant liners based on your specific needs and designs. Types of liners include:

BLUE OX

This economically priced sheet is made using a special ether-based formulation that will resist humidity and offers excellent abrasion resistance.

RED KRYPTANE

Kryptane Xtreme is perfect for chutes, spouts, and other high-wear areas. This product is FDA Drygood Handling approved.

EXTREME GREEN

Our most abrasive-resistant urethane. This urethane is used in commercial applications where grain is being processed throughout the year.

CERAMIC TILE

Our most abrasive resistant liner. Ceramic tile is used in commercial applications where grain is being processed throughout the year. Ceramic is most commonly used for soybean processing and large scale transload facilities.

LINER OPTIONS

UHMW, Blue urethane, Red Kryptane, High Energy Orange, Extreme Green, Ceramic tile.

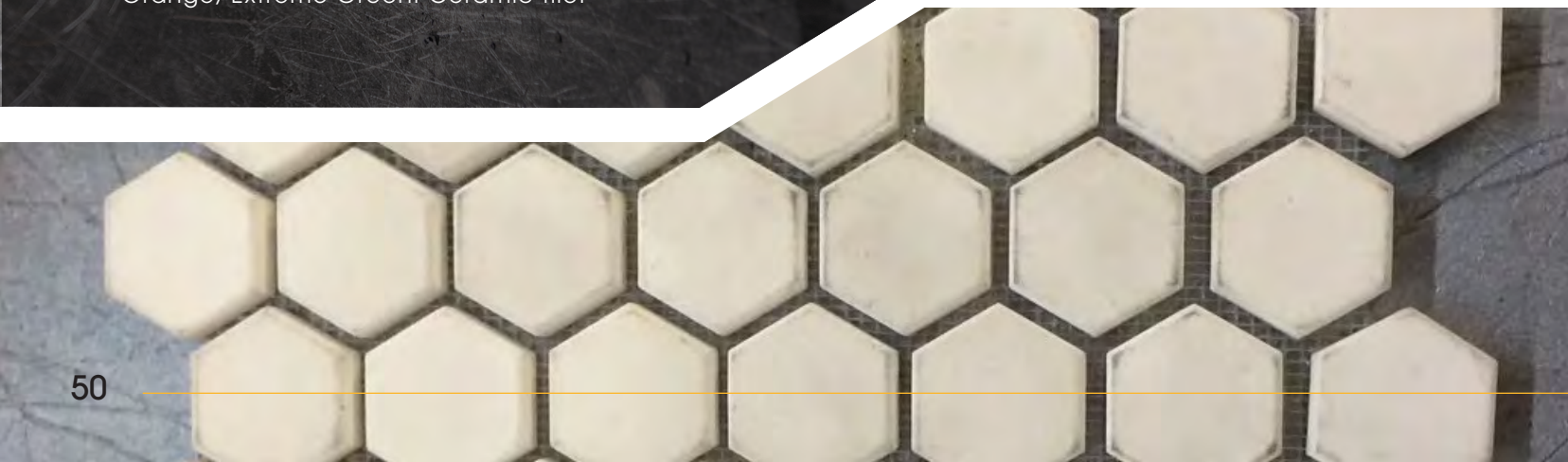

URETHANE AND UHMW LINER MATERIAL

BLUE URETHANE (4’ X 10’ SHEET)

THICKNESS	PLAIN BACK	FABRIC BACKED	EXPANDED METAL BACKED	CERAMIC CHIP
1/4″	$488.00	$499.00	$536.00	Call
5/16″	$598.00	$568.00	$586.00	Call
3/4″	$704.00	$659.00	$699.00	Call

RED KRYPTANE (4’ X 10’ SHEET)

THICKNESS	PLAIN BACK	FABRIC BACKED	EXPANDED METAL BACKED
1/4″	CALL	$685.00	$757.00
5/16″	CALL	CALL	CALL
3/8″	CALL	CALL	CALL

ARGONICS
ENGINEERED POLYURETHANE

UHMW SHEETS (4’ X 10’ SHEET)

THICKNESS	WHITE VIRGIN	BLACK REPRO
1/4″	$344.00	$286.00
1/2″	$694.00	$499.00

LARGER SIZED SHEETS AND ROLLS ARE AVAILABLE UPON REQUEST!

MAGNETIC REPAIR PATCH

QUICK & EASY REPAIRS ON ANY CURVED METAL SURFACE

Magnetic Repair Patches can fix your equipment in seconds with minimal expense. They're made to handle grain, aggregate, glass, slurry and dust collection, making them useful for various agricultural repairs. Flexible, durable, and waterproof they come with a standard galvanized outer liner with urethane inner liners.

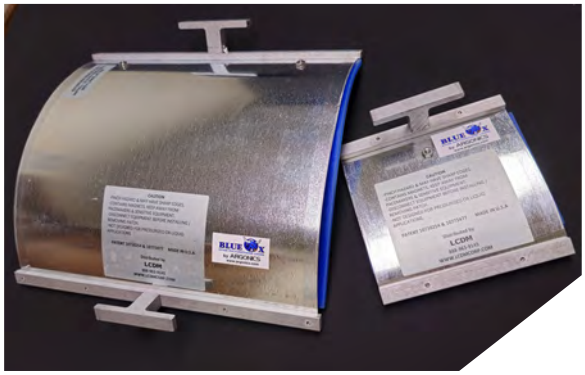

KEY ADVANTAGES

» EASY TO INSTALL
» SINGLE PERSON APPLICATION
» FLEXIBLE, DURABLE & REUSABLE
» DURABLE THROUGH THE TOUGHEST WEATHER CONDITIONS & CONSTANT USE.
» USE ON METAL PIPE, CHUTES, & U-TROUGHS
» FITS ANY SIZE PIPE 4–20 in. IN DIAMETER
» AFFORDABLE ON ANY BUDGET.

When you're working in any industry, you need to keep your equipment running to maintain productivity. That's why it's important to keep repair hardware on hand to quickly fix issues and get back to work. These patches are built to be tough, reliable and easy to apply. Magnetic patches yield significant benefits for businesses in any challenging industry dealing with metal piping and other materials.

MAGNETIC REPAIR PATCHES ARE AVAILABLE IN TWO SIZES:

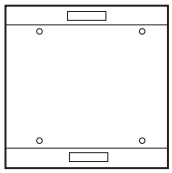

6″ x 6″
$118/ea

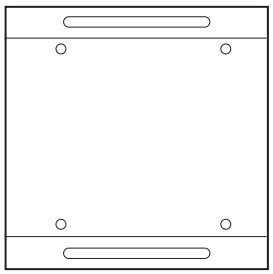

12″ x 12″
$227/ea

CALL FOR BULK ORDER PRICING

MAGNETIC PATCH

» For flat surfaces

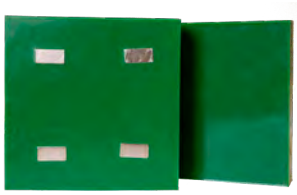

$105.00 each

PATCHWORX

THE EASIEST SOLUTION TO REPAIRS

Patchworx is an instant metal repair patch that is durable, flexible and waterproof. Patchworx willl not rot or rust. Once applied and exposed to ultraviolet (UV) light, it starts to harden like steel within five minutes of activation. Save money and time by using Patchworx.

APPLICATIONS

» GRAIN BINS
» ELEVATOR TRUNKING
» METAL BUILDINGS
» AUTOMOTIVES
» TOOLS
» MUCH, MUCH MORE!

KEY ADVANTAGES

» EASY TO USE
» CAN BE SANDED, PAINTED, OR DRILLED
» CUT TO SIZE
» 200-500 PSI RATING
» SAFE FOR SKIN
» CURES IN MINUTES
» STICKS TO MOST HARD SURFACES
» TEMPERATURE RANGE AFTER CURING IS FROM -40°F TO +392°F

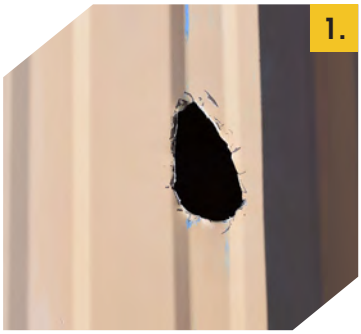

SIMPLE STEPS FOR APPLYING THE PATCHWORX UV REPAIR PATCH

1. CLEAN THE AREA TO BE PATCHED WITH A RAG AND WATER.
2. CUT THE PATCHWORX REPAIR MATERIAL TO FIT THE DAMAGED AREA AND PEEL TO REVEAL THE ADHESIVE BACKING.
3. APPLY THE MATERIAL EVENLY TO THE DAMAGED AREA AND APPLY HEAVY PRESSURE.
4. FOR CURING THE REPAIR PATCH, SIMPLY EXPOSE TO SUNLIGHT OR APPLY UV RAYS DIRECTLY FOR ABOUT FIVE MINUTES.

PatchWorx: Instant Repair Patch
Hardens like steel in 10 MINUTES

LCDM is the perfect place to order your Patchworx products. We offer small, medium and large patches to suit your repair needs. We deliver fast, and all of our Patchworx products are highly affordable. You can order as many as you need to be ready in the case of a sudden repair emergency.

SIZE	PRICE
3" x 6"	$16.99 (ea)
6" x 9"	$39.99 (ea)
9" x 12"	$49.99 (ea)
UV Flashlight	$28.99 (ea)

PRODUCT DIMENSIONS & SPECIFICATIONS

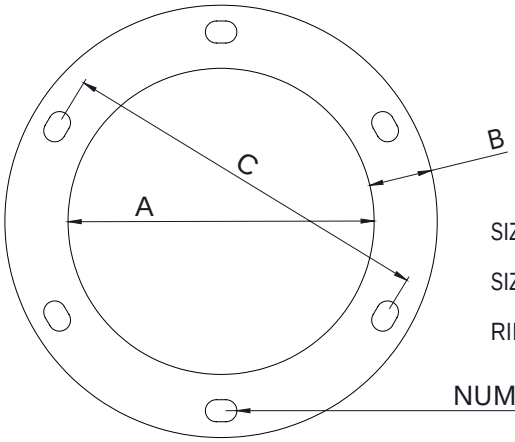

SIZES 6"-10" ARE: 13/32" SLOT X 5/8" HOLE

SIZES 12"-24" ARE: 3/16" SLOT X 7/16" HOLE

RING HEIGHT IS SAME AS DIMENSION B

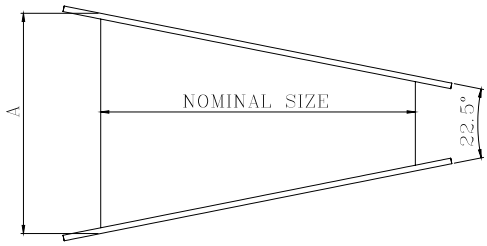

ANGLE IRON RINGS (FLAR)

SIZE	A	B	C	# HOLES	WEIGHT
6″	6 1/16″	1 1/4″	7 1/2″	6	1.8
8″	8 1/16″	1 1/4″	9 1/2″	8	2.3
10″	10 1/16″	1 1/4″	11 1/2″	8	2.8
12″	12 1/8″	1 1/2″	13 13/16″	12	6
14″	14 1/8″	1 1/2″	15 13/16″	12	7
16″	16 1/8″	1 1/2″	18 1/8″	16	8
18″	18 1/8″	1 1/2″	20 1/8″	16	8.5
20″	20 1/8″	1 1/2″	22 1/8″	20	9.5
22″	22 3/8″	1 1/2″	24 1/8″	20	10.8
24″	24 3/8″	1 1/2″	26 1/8″	20	11.5

ADJUSTABLE ELBOW (ELTE)

SIZE	A
6”	5”
8”	6”
10”	7”
12”	8”
14”	9”
16”	10”

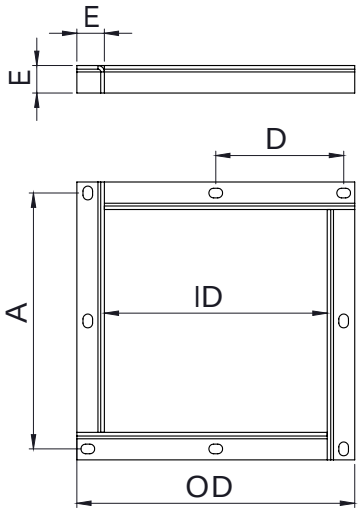

ALL SIZES: 5/8" SLOT X 7/16" HOLE

ANGLE IRON FLANGE (FLAS)

SIZE	A	O.D.	I.D.	D	E
6″	7 5/8″	8 5/8″	6 1/8″	3 13/16″	1 1/4″
8″	9 5/8″	10 5/8″	8 1/8″	4 13/16″	1 1/4″
10″	11 5/8″	12 5/8″	10 1/8″	5 13/16″	1 1/4″
12″	14″	15 1/8″	12 1/8″	4 21/32″	1 1/2″
14″	16″	17 1/8″	14 1/8″	4″	1 1/2″
16″	18″	19 1/8″	16 1/8″	4 1/2″	1 1/2″
18″	20″	21 1/8″	18 1/8″	5″	1 1/2″
20″	22″	23 1/8″	20 1/8″	5 ½″	1 1/2″
22″	24″	25 1/8″	22 1/8″	4″	1 1/2″
24″	26″	27 1/8″	24 1/8″	4 21/64″	1 1/2″

SIGNATURE PRODUCT

CAD MODELS AVAILABLE
OVERLAY AND LAYOUTS AVAILABLE

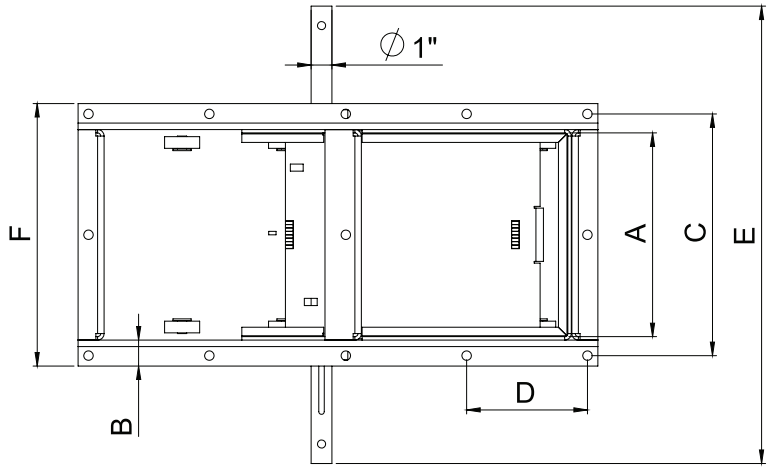

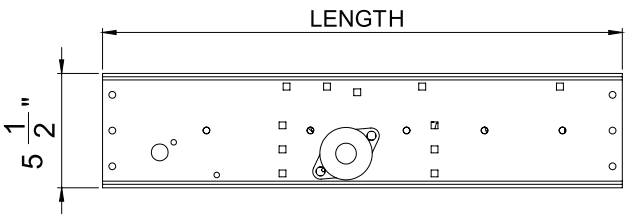

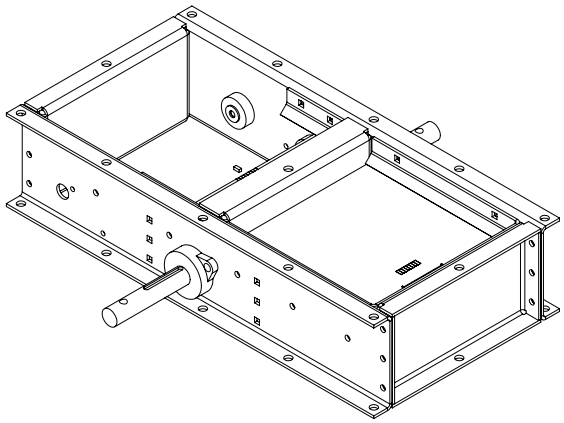

MANUAL

PART NUMBER	(A) NOMINAL SIZE	B	C	D	E	F	G	LENGTH	OVERALL LENGTH
GTRS06xxx	6	1--1/4	7--5/8	3--13/16	18	8--5/8	-	17	-
GTRS08xxx	8	1--1/4	9--5/8	4--13/16	20	10--5/8	-	21	-
GTRS10xxx	10	1--1/4	11--5/8	5--13/16	22	12--5/8	-	25	-
GTRS12xxx	12	1--1/2	14	4--21-32	24	15--1/8	-	29--1/2	-
GTRS14xxx	14	1--1/2	16	4	26	17--1/8	-	33--1/2	-
GTRS16xxx	16	1--1/2	18	4--1/2	28	19--1/8	-	37--1/2	-
GTRS18xxx	18	1--1/2	20	5	30	21--1/8	-	41--1/2	-
GTRS20xxx	20	1--1/2	22	5--1/2	32	23--1/8	-	45--1/2	-
GTRS22xxx	22	1--1/2	24	4	34	25--1/8	-	49--1/2	-
GTRS24xxx	24	1--1/2	26	4--21-64	36	27--1/8	-	53--1/2	-

CAD MODELS AVAILABLE
OVERLAY AND LAYOUTS AVAILABLE

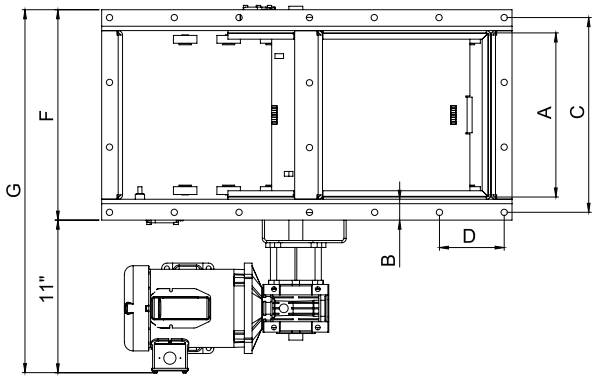

ELECTRIC

PART NUMBER	(A)NOMINAL SIZE	B	C	D	E	F	G	LENGTH	OVERALL LENGTH
GTRS06xxx-Ex	6	1--1/4	7--5/8	3--13/16	-	8--5/8	19--5/8	17	-
GTRS08xxx-Ex	8	1--1/4	9--5/8	4--13/16	-	10--5/8	21--5/8	21	-
GTRS10xxx-Ex	10	1--1/4	11--5/8	5--13/16	-	12--5/8	23--5/8	25	-
GTRS12xxx-Ex	12	1--1/2	14	4--21-32	-	15--1/8	26--1/8	29--1/2	-
GTRS14xxx-Ex	14	1--1/2	16	4	-	17--1/8	28--1/8	33--1/2	-
GTRS16xxx-Ex	16	1--1/2	18	4--1/2	-	19--1/8	30--1/8	37--1/2	-
GTRS18xxx-Ex	18	1--1/2	20	5	-	21--1/8	32--1/8	41--1/2	-
GTRS20xxx-Ex	20	1--1/2	22	5--1/2	-	23--1/8	34--1/8	45--1/2	-
GTRS22xxx-Ex	22	1--1/2	24	4	-	25--1/8	36--1/8	49--1/2	-
GTRS24xxx-Ex	24	1--1/2	26	4--21-64	-	27--1/8	38--1/8	53--1/2	-

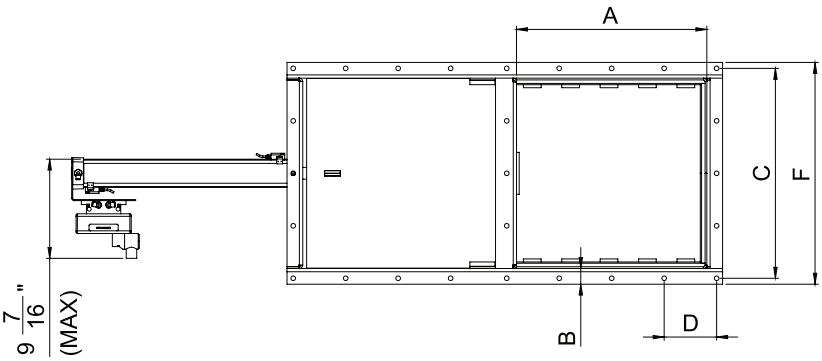

PNEUMATIC

PART NUMBER	(A)NOMINAL SIZE	B	C	D	E	F	G	LENGTH	OVERALL LENGTH
GTPS06xxxx	6	1--1/4	7--5/8	3--13/16	-	8--5/8	-	17	25--3/4
GTPS08xxxx	8	1--1/4	9--5/8	4--13/16	-	10--5/8	-	21	35--3/4
GTPS10xxxx	10	1--1/4	11--5/8	5--13/16	-	12--5/8	-	25	39--3/4
GTPS12xxxx	12	1--1/2	14	4--21-32	-	15--1/8	-	29--1/2	44
GTPS14xxxx	14	1--1/2	16	4	-	17--1/8	-	33--1/2	49--7/8
GTPS16xxxx	16	1--1/2	18	4--1/2	-	19--1/8	-	37--1/2	56
GTPS18xxxx	18	1--1/2	20	5	-	21--1/8	-	41--1/2	62
GTPS20xxxx	20	1--1/2	22	5--1/2	-	23--1/8	-	45--1/2	68--3/8
GTPS22xxxx	22	1--1/2	24	4	-	25--1/8	-	49--1/2	80--5/8
GTPS24xxxx	24	1--1/2	26	4--21-64	-	27--1/8	-	53--1/2	80--5/9

SIGNATURE PRODUCT

CAD MODELS AVAILABLE
OVERLAY AND LAYOUTS AVAILABLE

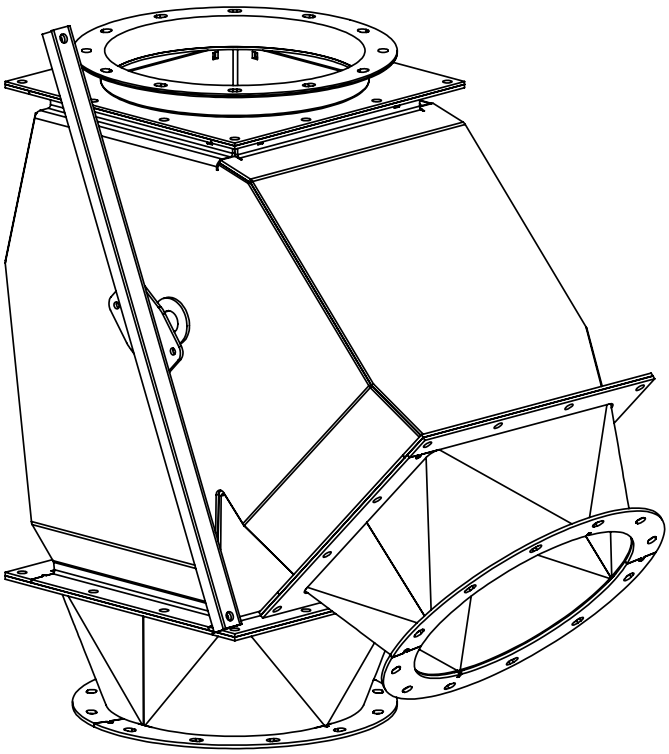

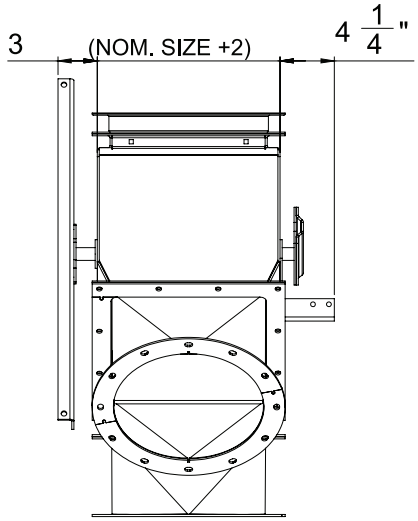

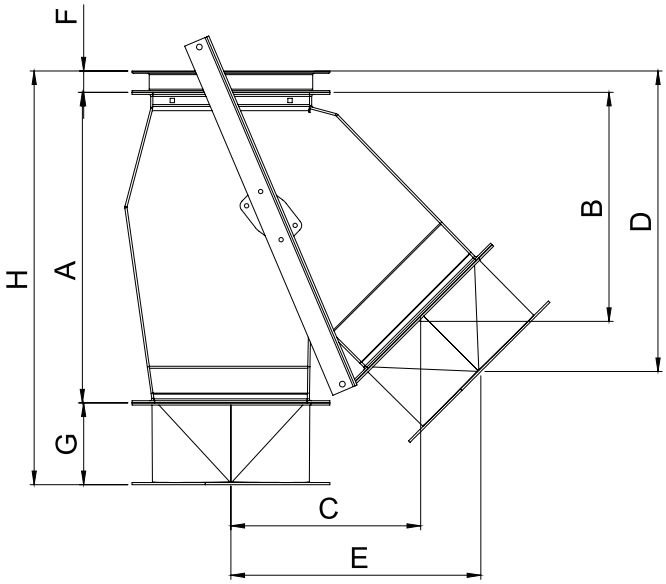

MANUAL

PART NUMBER	NOMINAL SIZE	A	B	C	D	E	F	G	H
VAKS06xx45xx	6	13	9--3/8	8--1/8	14--7/16	11--3/4	1--3/8	5--1/4	19--5/8
VAKS08xx45xx	8	16	11--3/8	9--3/4	16--7/16	13--5/16	1--3/8	5--1/4	22--5/8
VAKS10xx45xx	10	19--7/8	14--1/4	12--5/8	19--5/16	16--7/16	1--3/8	5--1/4	26--1/2
VAKS12xx45xx	12	23--3/4	17	15--1/4	23	19--5/8	1--5/8	6--1/4	31--5/8
VAKS14xx45xx	14	27--3/4	19--3/4	17	24	21--5/16	1--5/8	6--1/4	35--5/8
VAKS16xx45xx	16	----------CONSULT FACTORY----------							

ELECTRIC (ACTUATOR DRIVE)

PART NUMBER	NOMINAL SIZE	A	B	C	D
VAKS06xx45xx-Ex	6	13	9--3/8	8--1/8	29
VAKS08xx45xx-Ex	8	16	11--3/8	9--3/4	29--1/8
VAKS10xx45xx-Ex	10	19--7/8	14--1/4	12--5/8	28--3/4
VAKS12xx45xx-Ex	12	23--3/4	17	15--1/4	28--5/16
VAKS14xx45xx-Ex	14	27--3/4	19--3/4	17	27--7/8
VAKS16xx45xx-Ex	16	---------- CONSULT FACTORY ----------			

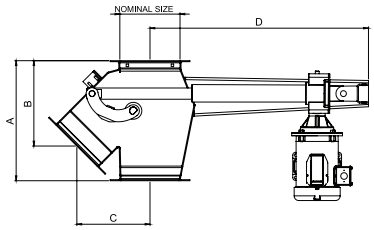

PNEUMATIC

PART NUMBER	NOMINAL SIZE	A	B	C	D
VAKS06xx45xx-P	6	13	9--3/8	8--1/8	30
VAKS08xx45xx-P	8	16	11--3/8	9--3/4	30--1/2
VAKS10xx45xx-P	10	19--7/8	14--1/4	12--5/8	29--1/2
VAKS12xx45xx-P	12	23--3/4	17	15--1/4	29--1/2
VAKS14xx45xx-P	14	27--3/4	19--3/4	17	28
VAKS16xx45xx-P	16	---------- CONSULT FACTORY ----------			

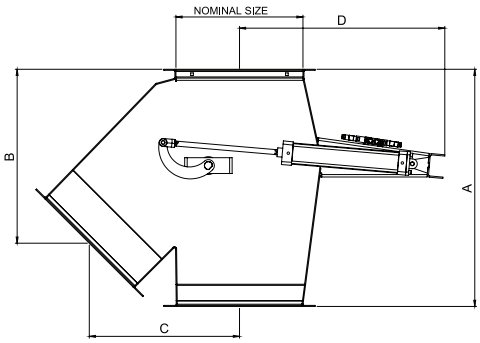

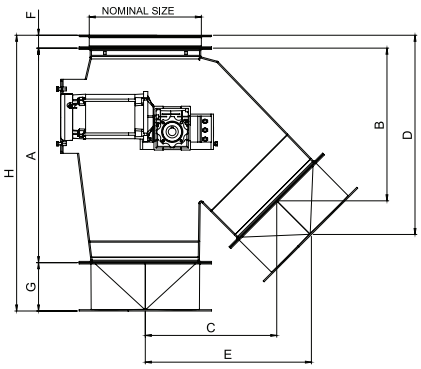

ELECTRIC (ACTUATOR DRIVE)

PART NUMBER	NOMINAL SIZE	A	B	C	D	E	F	G	H
VAKS06xx45GG	6	13	9--3/8	8--1/8	14--7/16	11--3/4	1--3/8	5--1/4	19--5/8
VAKS08xx45GG	8	16	11--3/8	9--3/4	16--7/16	13--5/16	1--3/8	5--1/4	22--5/8
VAKS10xx45GG	10	19--7/8	14--1/4	12--5/8	19--5/16	16--7/16	1--3/8	5--1/4	26--1/2
VAKS12xx45GG	12	23--3/4	17	15--1/4	23	19--5/8	1--5/8	6--1/4	31--5/8
VAKS14xx45GG	14	27--3/4	19--3/4	17	24	21--5/16	1--5/8	6--1/4	35--5/8
VAKS16xx45GG	16	---------- CONSULT FACTORY ----------							

SIGNATURE PRODUCT

CAD MODELS AVAILABLE
OVERLAY AND LAYOUTS AVAILABLE

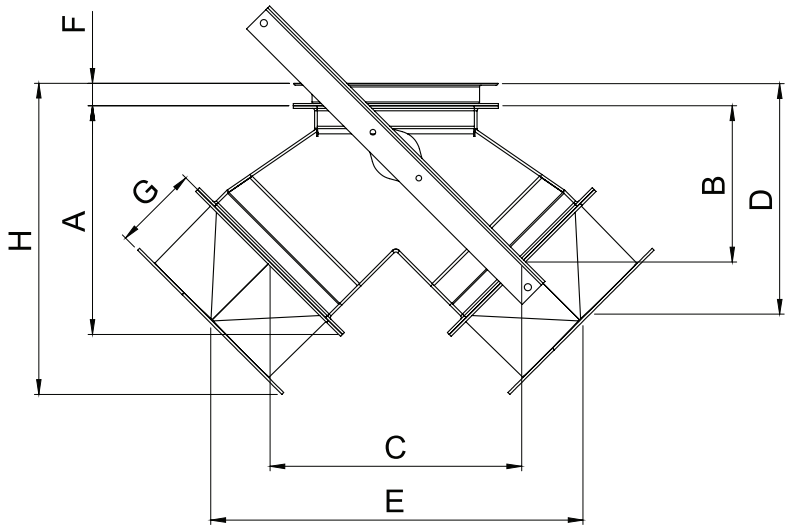

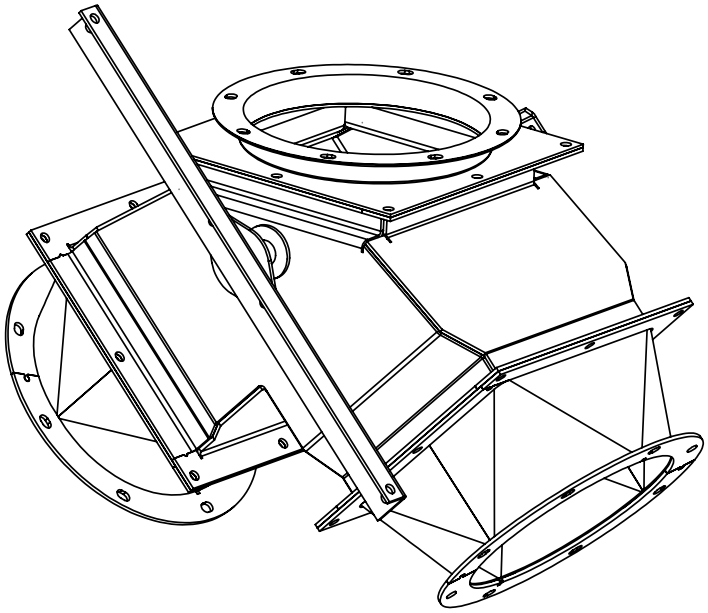

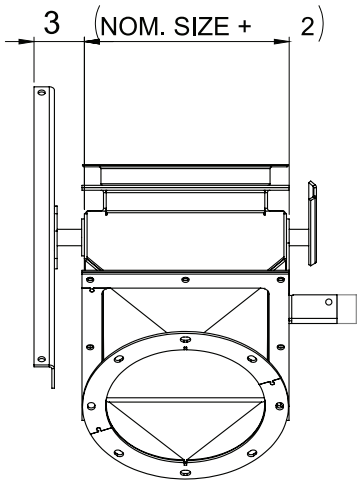

MANUAL

PART NUMBER	NOMINAL SIZE	A	B	C	D	E	F	G	H
VAYS06xx45xx	6	10	7	10	12	17--7/16	1--3/8	5--1/4	15--1/8
VAYS08xx45xx	8	11--3/8	7--5/8	11--7/8	12--5/8	19--1/4	1--3/8	5--1/4	16--1/2
VAYS10xx45xx	10	14	9--5/8	15--1/2	14--5/8	23	1--3/8	5--1/4	19--1/8
VAYS12xx45xx	12	16--5/8	11--1/4	16--1/2	17--5/16	25--5/16	1--5/8	6--1/4	22--5/8
VAYS14xx45xx	14	18--1/2	12--1/4	18--1/2	18--5/8	27--5/16	1--5/8	6--1/4	24--5/8
VAYS16xx45xx	16	----------CONSULT FACTORY----------							

ELECTRIC (ACTUATOR DRIVE)

PART NUMBER	NOMINAL SIZE	A	B	C	D	E
VAYS06xx45GE	6	10	7	10	12	---
VAYS08xx45GE	8	11--3/8	7--5/8	11--7/8	12--5/8	---
VAYS10xx45GE	10	14	9--5/8	15--1/2	14--5/8	---
VAYS12xx45GE	12	16--5/8	11--1/4	16--1/2	17--5/16	30--1/2
VAYS14xx45GE	14	18--1/2	12--1/4	18--1/2	18--5/8	---
VAYS16xx45GE	16	---------- CONSULT FACTORY ----------				

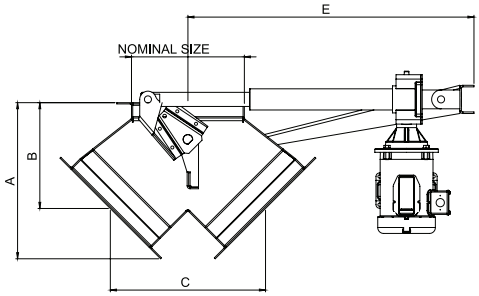

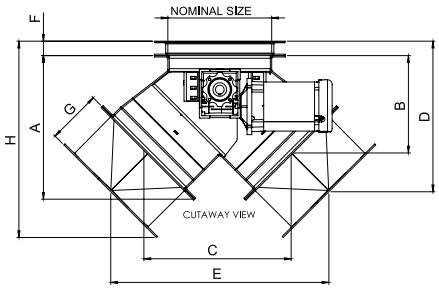

ELECTRIC (GEAR DRIVE)

PART NUMBER	NOMINAL SIZE	A	B	C	D	E	F	G	H
VAYS06xx45GG	6	10	7	10	12	17--7/16	1--3/8	5--1/4	15--1/8
VAYS08xx45GG	8	11--3/8	7--5/8	11--7/8	12--5/8	19--1/4	1--3/8	5--1/4	16--1/2
VAYS10xx45GG	10	14	9--5/8	15--1/2	14--5/8	23	1--3/8	5--1/4	19--1/8
VAYS12xx45GG	12	16--5/8	11--1/4	16--1/2	17--5/16	25--5/16	1--5/8	6--1/4	22--5/8
VAYS14xx45GG	14	18--1/2	12--1/4	18--1/2	18--5/8	27--5/16	1--5/8	6--1/4	24--5/8
VAYS16xx45GG	16	---------- CONSULT FACTORY ----------							

PNEUMATIC

PART NUMBER	NOMINAL SIZE	A	B	C	D	E
VAYS06xx45xx	6	10	7	10	12	---
VAYS08xx45xx	8	11--3/8	7--5/8	11--7/8	12--5/8	---
VAYS10xx45xx	10	14	9--5/8	15--1/2	14--5/8	---
VAYS12xx45xx	12	16--5/8	11--1/4	16--1/2	17--5/16	19--3/4
VAYS14xx45xx	14	18--1/2	12--1/4	18--1/2	18--5/8	---
VAYS16xx45xx	16	---------- CONSULT FACTORY ----------				

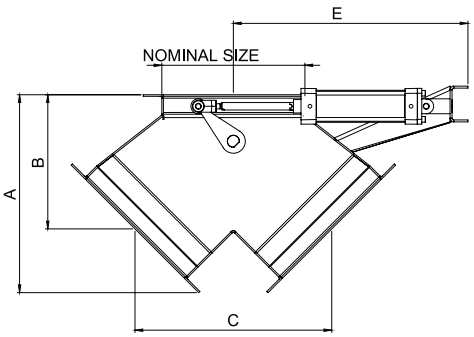

SIGNATURE PRODUCT

CAD MODELS AVAILABLE
OVERLAY AND LAYOUTS AVAILABLE

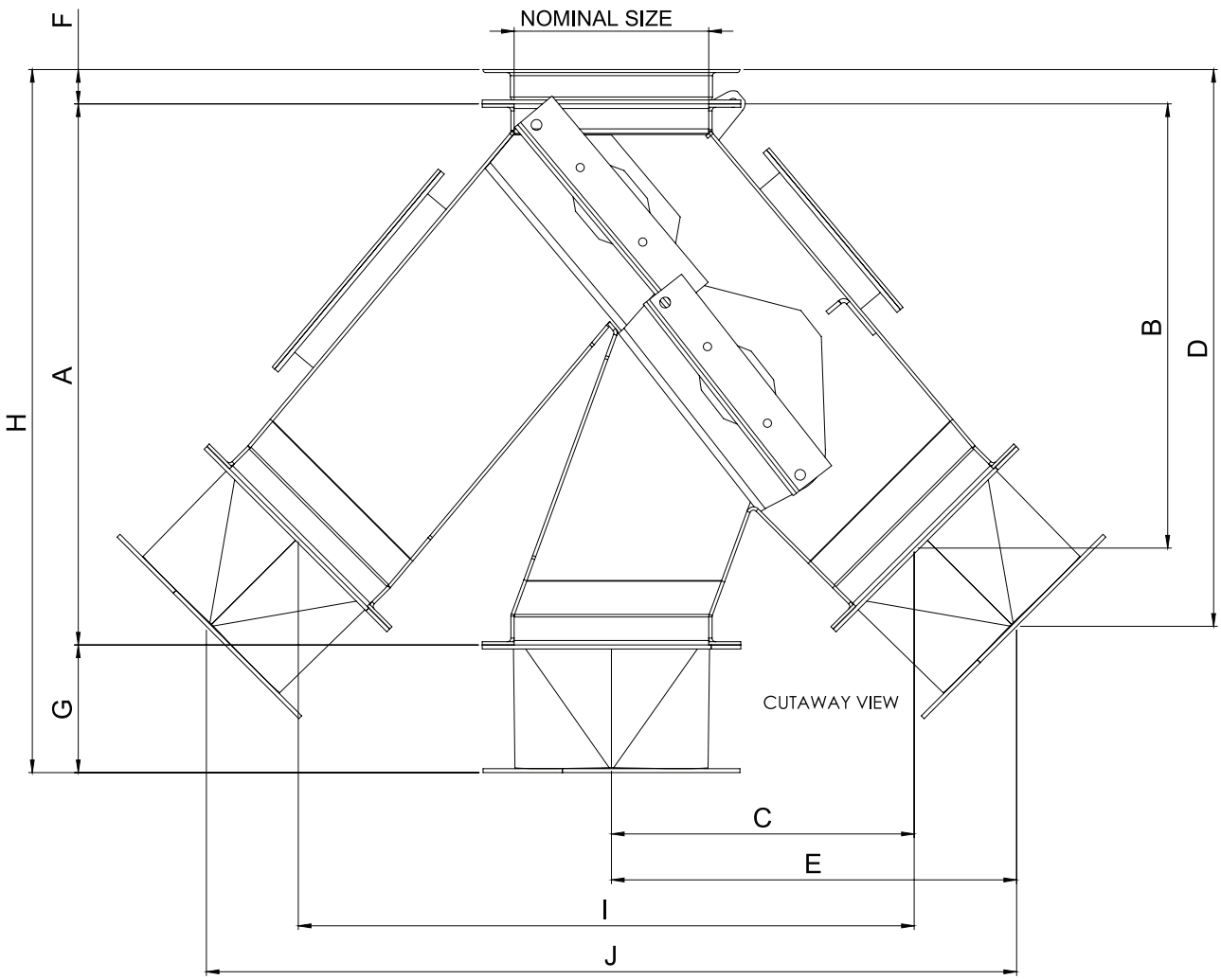

MANUAL

PART NUMBER	NOMINAL SIZE	A	B	C	D	E	F	G	H	I	J
VATS06xx45xx	6	17-1/2	17-7/8	39698	17-7/16	13-1/2	1--3/8	5--1/4	24-1/8	19-5/8	27-1/8
VATS08xx45xx	8	22-1/4	17-7/8	13-1/2	23	17	1--3/8	5--1/4	29	25-5/8	33-1/8
VATS10xx45xx	10	27-3/4	23	17-1/8	27-5/8	20-5/8	1--3/8	5--1/4	34-7/16	34	41-5/16
VATS12xx45xx	12	29	23-5/16	16	29	20-3/8	1--5/8	6--1/4	37	30-5/8	39-1/2
VATS14xx45xx	14	31-3/8	24-3/4	17-3/4	30-1/2	22-1/4	1--5/8	6--1/4	39-3/8	35-3/4	44-1/2
VATS16xx45xx	16	38-5/8	31-3/8	20-3/4	39-1/2	27-3/4	1--5/8	6--1/4	50-1/4	41-1/2	55-5/8

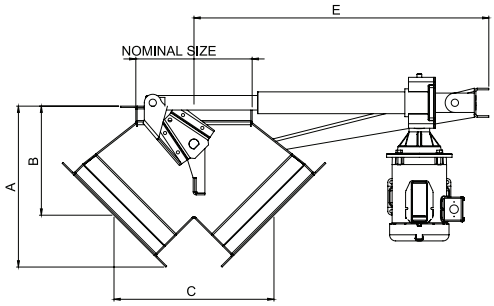

ELECTRIC (ACTUATOR DRIVE)

PART NUMBER	NOMINAL SIZE	A	B	C	D	E	F	I
VATS06xx45xx	6	17-1/2	17-7/8	39698	17-7/16	29--1/2	33--1/8	19-5/8
VATS08xx45xx	8	22-1/4	17-7/8	13-1/2	23	---	---	25-5/8
VATS10xx45xx	10	27-3/4	23	17-1/8	27-5/8	---	---	34
VATS12xx45xx	12	29	23-5/16	16	29	31--1/2	38--5/16	30-5/8
VATS14xx45xx	14	31-3/8	24-3/4	17-3/4	30-1/2	31--1/2	39--5/16	35-3/4
VATS16xx45xx	16	38-5/8	31-3/8	20-3/4	39-1/2	31--1/2	41	41-1/2

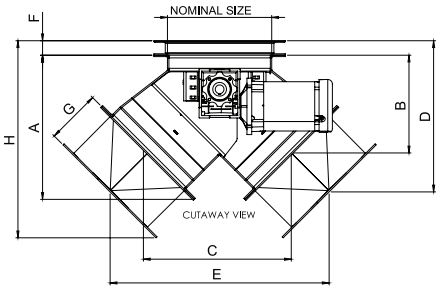

ELECTRIC (GEAR DRIVE)

PART NUMBER	NOMINAL SIZE	A	B	C	D	E	F	G	H	I	J
VATS060845GG	6	17-1/2	17-7/8	39698	17-7/16	13-1/2	1--3/8	5--1/4	24-1/8	19-5/8	27-1/8
VATS080845GG	8	22-1/4	17-7/8	13-1/2	23	17	1--3/8	5--1/4	29	25-5/8	33-1/8
VATS100845GG	10	27-3/4	23	17-1/8	27-5/8	20-5/8	1--3/8	5--1/4	34-7/16	34	41-5/16
VATS120845GG	12	29	23-5/16	16	29	20-3/8	1--5/8	6--1/4	37	30-5/8	39-1/2
VATS140845GG	14	31-3/8	24-3/4	17-3/4	30-1/2	22-1/4	1--5/8	6--1/4	39-3/8	35-3/4	44-1/2
VATS160845GG	16	38-5/8	31-3/8	20-3/4	39-1/2	27-3/4	1--5/8	6--1/4	50-1/4	41-1/2	55-5/8

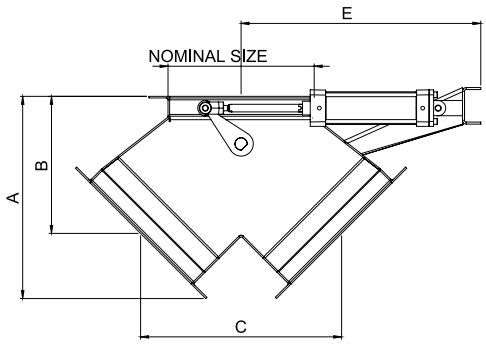

PNEUMATIC

PART NUMBER	NOMINAL SIZE	A	B	C	D	E	F	I
VATS06xx45xx	6	17-1/2	17-7/8	39698	17-7/16	---	33--1/8	19-5/8
VATS08xx45xx	8	22-1/4	17-7/8	13-1/2	23	---	---	25-5/8
VATS10xx45xx	10	27-3/4	23	17-1/8	27-5/8	---	---	34
VATS12xx45xx	12	29	23-5/16	16	29	---	---	30-5/8
VATS14xx45xx	14	31-3/8	24-3/4	17-3/4	30-1/2	31--5/8	39--1/2	35-3/4
VATS16xx45xx	16	38-5/8	31-3/8	20-3/4	39-1/2	---	---	41-1/2

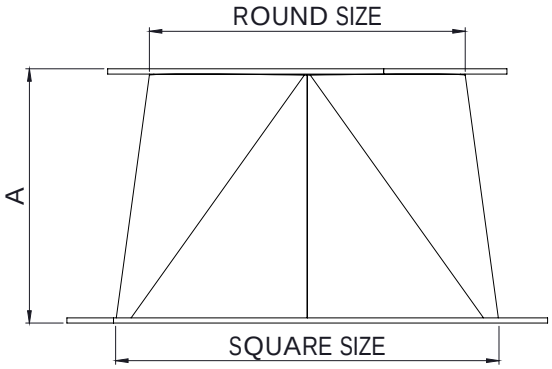

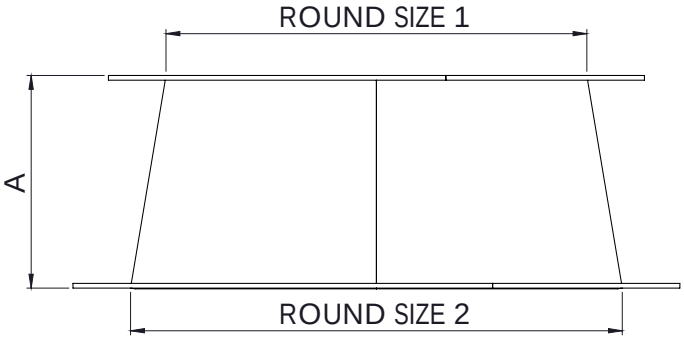

SQUARE TO ROUND (TRSR) AND SQUARE TO SQUARE (TRSS) TRANSITIONS

SQUARE	ROUND	HEIGHT
6″	6″	5 1/4″
8″	6″	6 3/4″
8″	8″	5 1/4″
10″	8″	6 3/4″
10″	10″	5 1/4″
12″	10″	8″
12″	12″	6 1/4″
14″	10″	10″
14″	12″	10″
14″	14″	6 1/4″
16″	10″	10″
16″	12″	10″
16″	14″	10″
16″	16″	10″
18″	14″	10″
18″	16″	10″
18″	18″	10″
20″	16″	10″
20″	18″	10″
20″	20″	10″
24″	20″	10″
24″	22″	10″
24″	24″	10″

» Square to Round and Square to Square Transitions have the same height.

ROUND TO ROUND REDUCERS

2” Reduction Reducers are 6” tall

4” Reduction Reducers are 12” tall

6” Reduction Reducers are 18” tall

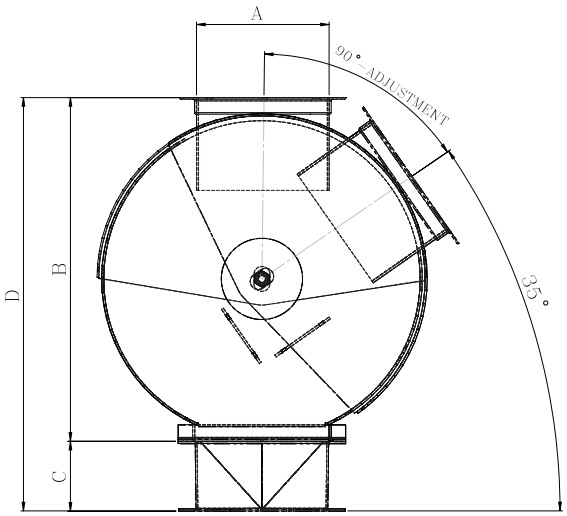

ROUND CUSHION BOX (DBAC)

SIZE (A)	B	C
6″	20 5/8″	7 3/8″
8″	22 3/8″	9 3/8″
10″	26″	11 3/8″
12″	30 7/8″	13 3/8″
14″	31″	15 3/8″
16″	38 3/4″	17 3/8″

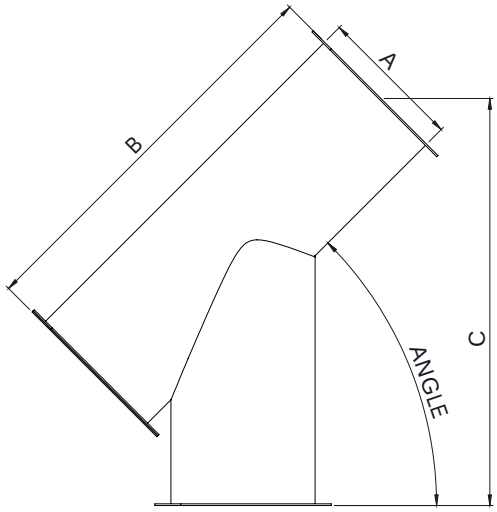

PIPE DEADBOX 45° (DBFP)

SIZE (A)	B	C
6″	18.4″	19″
8″	23.3″	24.3″
10″	28.5″	29.5″
12″	33.7″	35.2″
14″	38.7″	40.4″

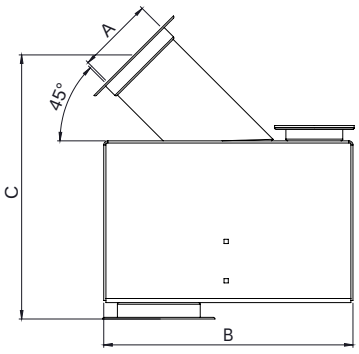

BOX STYLE DEADBOX 45° (DBFB45)

SIZE (A)	B	C
6″	18 11/16″	20 11/16″
8″	24 5/16″	26 3/16″
10″	30″	31 13/16″
12″	35 11/16″	35 5/16″
14″	41 3/8″	38 7/8″

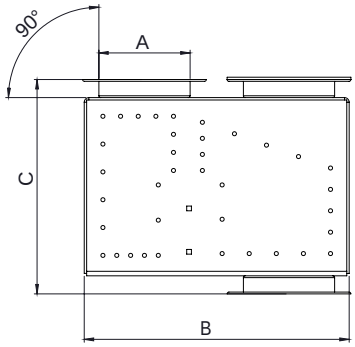

BOX STYLE DEADBOX 90° (DBFB90)

SIZE (A)	B	C
6″	18″	16″
8″	22″	20″
10″	26″	24″
12″	30″	26″
14″	34″	28″

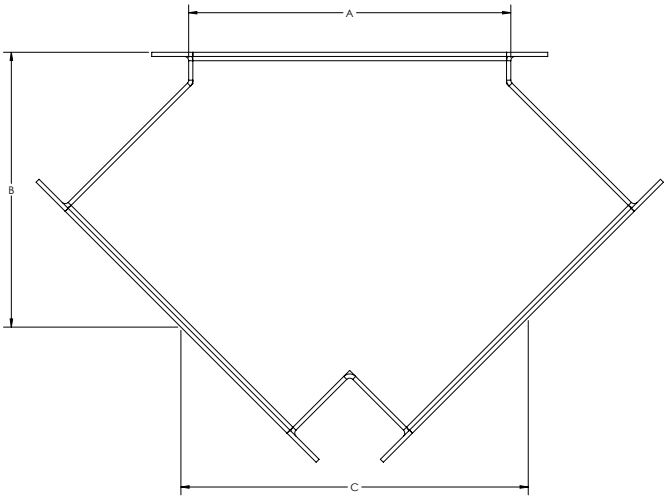

Y-STYLE SQUARE BRANCH 45° (BRSY)

SIZE (A)	B	C
6″	6 3/8″	8-1/8″
8″	7 1/2″	9-11/16"
10″	8 5/8″	11-1/16"
12″	9-3/4″	12-1/2"
14″	10-7/8″	13-7/8"
16"	12"	15-5/16"

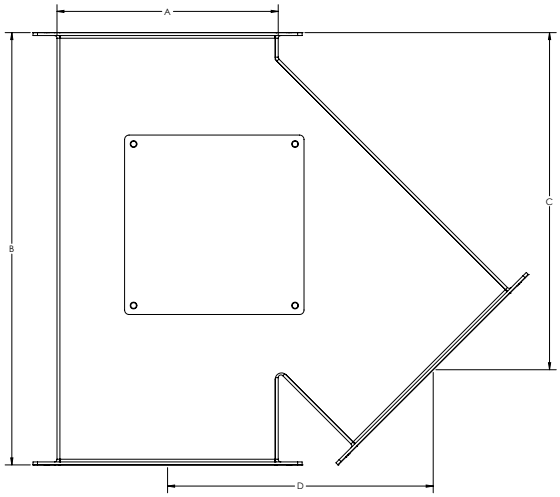

K-STYLE SQUARE BRANCH 45° (BRSK)

SIZE (A)	B	C	D
6″	14-3/4"	11-3/4"	9-1/4"
8″	17-9/16"	13-7/8"	10-15/16"
10″	20-7/16"	16"	12-11/16"
12″	24-1/16"	18-13/16"	14-13/16"
14″	26-15/16"	20-15/16"	16-1/2"
16"	29-3/4"	23"	18-3/16"

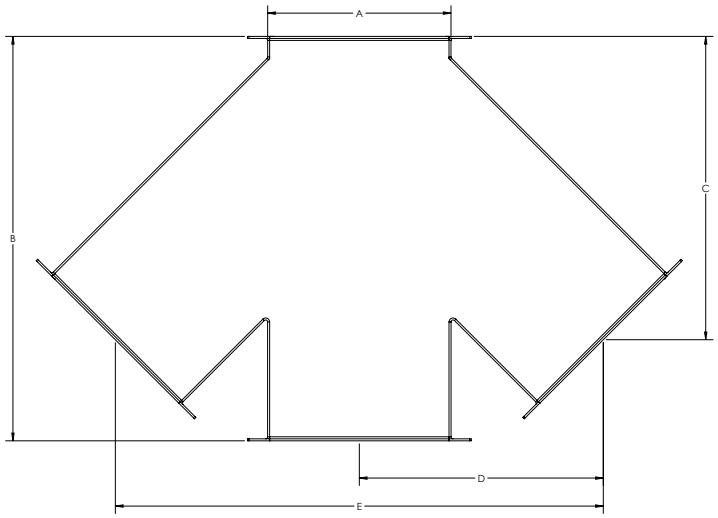

3-WAY SQUARE BRANCH 45° (BRST)

SIZE (A)	B	C	D	E
6″	15-13/16"	12"	9-1/4"	18-7/16"
8″	22"	16-1/2"	13-5/16"	26-5/8"
10″	24-11/16"	18-1/2"	14-7/8"	29-13/16"
12″	27-5/16"	20-1/2"	16-1/2"	33"
14″	30"	22-1/2"	18-1/16"	36-1/8"
16"	32-5/8"	24-1/2"	19-11/16"	39-5/16"

WE SHIP WORLDWIDE

LCDM products are designed with the millwright in mind. We strive to provide the industry with new and innovative ideas to help reduce costs and increase efficiencies. Our signature product line, which includes our patented DBAR Cushion Box, Full Flow Valves, Slide Gates and Flow Retarders were designed by experienced in-house production staff with over 40 years of experience in the grain industry. Our mission is to take the lead in supplying our innovative yet affordable products to the material handling industry and build long lasting business relationships.

ENGINEERED
GRAIN HANDLING
PRODUCTS

LCDM

PROUDLY EMPLOYEE OWNED

CALL US TO DISCUSS YOUR GRAIN HANDLING PRODUCT NEEDS.

(888) 963-9145

22394 US HWY 136,
MEMPHIS, MO 63555

871 RANGE END RD,
DILLSBURG, PA 17019

LCDM

LCDMCORP.COM